1999

Auction development for the price-based electric power industry

Somgiat Dekrajangpetch
Iowa State University

Auction development for the price-based electric power industry

by

Somgiat Dekrajangpetch

A dissertation submitted to the graduate faculty

in partial fulfillment of the requirements for the degree of

DOCTOR OF PHILOSOPHY

Major: Electrical Engineering (Electric Power)

Major Professor: Gerald B. Sheblé

Iowa State University

Ames, Iowa

1999

UMI Number: 9977379

UMI®

Bell & Howell Information and Learning Company
300 North Zeeb Road
P.O. Box 1346
Ann Arbor, MI 48106-1346

Graduate College
Iowa State University

This is to certify that the Doctoral dissertation of

Somgiat Dekrajangpetch

has met the dissertation requirements of Iowa State University

Signature was redacted for privacy.

Major Professor

Signature was redacted for privacy.

For the Major Program

Signature was redacted for privacy.

For the Graduate College

DEDICATION

To my parents,

Somkuan Dekrajangpetch and Pornpimol Sae-Heung.

TABLE OF CONTENTS

LIST OF FIGURES

LIST OF TABLES

ACKNOWLEDGEMENTS

I would like to thank my major professor, Dr. Gerald B. Sheblé, who has always provided me with valuable guidance and suggestions throughout this work. I would like to acknowledge his sense of direction in guiding me to the interesting research and his uncanny ability to know where the industry is moving. I also thank him for providing financial support via the research assistantship throughout my study. I am profoundly grateful for his help and support in both academic and non-academic issues. I would like to thank other committee members, Dr. Venkataramana Ajjarapu, Dr. Arne Hallam, Dr. Joseph A. Herriges, Dr. James D. McCalley, and Dr. Timothy Van Voorhis for providing me with useful suggestions and for reviewing this work.

Besides the electric power area, this work deals greatly with economics and operations research. I am grateful to Dr. Arne Hallam for his time and effort in helping to solve economic problems that have occurred while performing this work. The same acknowledgement goes to Dr. Timothy Van Voorhis and Dr. Mike Maccan for their assistance with the operations research problems. The basics of my Master's thesis are the foundation of this dissertation. I would like to thank Dr. Gerald B. Sheblé, Dr. James McCalley, and Dr. Peter Mattilla, who served as my committee members for my M.S., for providing valuable suggestions on my thesis. This dissertation is composed of several journal and conference papers. I would like to acknowledge the useful suggestion by the anonymous reviewers.

One of the hardest exams I have had to take is the qualifying exam required for entering to the Ph.D. I would like to thank the professors in electrical engineering and friends in the power group who provided their time and consultation while I was preparing the exam. I also thank the professors encountered in the classes I took at Iowa State University for teaching me the basics.

Funding for research assistants are provided from utilities and other entities through the Electric Power Research Center at Iowa State University. I would like to acknowledge that the majority of funding supporting to me is from the National Science Foundation, Mid-American Utility, and Electric Power Research Institute.

I am very grateful to Dr. Charles Richter for his time and effort in reviewing this dissertation. I also thank him for his help and support throughout this work. I thank Dr. Jayant Kumar for his consultation at the beginning of this work. I would like to acknowledge his original development of some auction formulations, which are enhanced by this work. I thank Hao Wu for his valuable assist to this work. I would like to acknowledge him of constructing results for chapters 3 and 5 and modified Lerner's index example in chapter 8. I also acknowledge him in his contribution on pricing method in chapter 3, especially the construction of other several case studies not shown in this work. I thank James Nicolaisen for reviewing chapter 5. I also thank Kah-Hoe Ng and Mona Bisat for their useful discussions.

I would like to acknowledge Dr. Vara Varawittaya of his consultation on the computer problems occurring during this work. I am profoundly grateful for his time and effort. I thank Atiwat Aimdilokwong and other friends in Iowa State University for their supports. I am very grateful to Hudsadin Eamsherangkul for his great

effort in helping with formatting and proof-correcting of this dissertation. Finally, I would like to thank everyone in my family who has always provided me with encouragement and support in every aspect of my life, inspiring me to finish this work.

1 INTRODUCTION

1.1 Ongoing restructuring of the electric power industry

The restructuring of the electric power industry has already taken place in some countries and is taking place in some other countries in the world. In the US, the restructuring process has already taken place in California and Pennsylvania-Jersey-Maryland (PJM), and is taking place in some other states, e.g., New York, and New England. The restructuring is to move away from the cost-based monopolistic environment of the past to the priced-based competitive environment of the future. The purpose of the restructuring is to promote competition. The underlying economic concept for competition is that competitive market achieves Pareto efficiency (Pareto optimality), which is desired for the economy. Pareto efficiency is achieved when it is impossible to make one person better off unless some-other person is made worse off. Competitive market mechanism determines the price by supply and demand. This is different from the vertically monopolistic market in the past, in which the price is determined by the regulators. An acceptable rate of return was commonly established by the regulators to determine the price [Gedra, 1998]. A variety of market frameworks can be used for the price-based competitive environment. Different market frameworks are presently used in various countries. The framework used by this work is described in chapter 2.

Auctions are considered to be a good pricing mechanism for competitive markets. There have been various auction structures proposed for electric power markets. Week-ahead, day-ahead, hour-ahead, and real-time markets are some common prevalent markets found. The methods for matching bids in auctions are based on optimization techniques. Different optimization techniques are utilized to implement different types of auctions. Pricing methods are also used variably; for example, uplift approach has been used in the United Kingdom while locational marginal pricing is used with PJM. Some control areas began to have their futures contracts traded in New York Mercantile Exchange.

1.2 Ideal market

The ideal electricity market should follow the economic theory of the competitive market. Experience from the deregulation of other commodities' markets is extremely useful for the electricity market. Natural gas is one of the substituted products for electricity and natural gas deregulation provides a good case study for electricity. Natural gas deregulation can be separated into two major markets, the gas market and the transmission or pipeline market. Comparing natural gas to electricity, two major markets are power market and the transmission line market. The analysis and discussion of natural gas pipeline deregulation is well written in [Michaels, 1995].

Application of economic theory or deregulation experience of other commodities to the electricity market requires several cautions because of special properties of electricity. The flow of electricity must follow Kirchoff's laws, which are the laws of physics describing the relationship between electrical voltage, current,

and power. A change in a bus injection can change the loading of the transmission lines elsewhere in the system and this can cause an externality. The theory of externalities is well illustrated in [Cornes, 1996]. It has been controversial to define externality explicitly. In brief, externality could be thought of as the situation that the utilities or production functions of other economic agents are affected by the action of one economic agent [Cornes, 1996]. Transmitting electricity from one bus to another bus generally results in losses, which cannot be determined beforehand. It is difficult to store electricity efficiently and/or inexpensively. The power system must remain security even this conflicts with the economic criteria.

Considering the special properties of electricity, the desired characteristics of the ideal market for electricity fall into four general categories: price, the physical power systems, choices, and information. All of the requirements that will be described must be enforced under the supervision of the regulator and the independent contract administrator (ICA). Sellers and buyers are price-takers who cannot control the market. Prices are determined from market supply and demand. Prices can be affected by collusion and entries and exits of sellers and buyers. Collusion that increases market power should be observable and should not be allowed. Free entry must not be prevented by incumbent firms. Fairness and uniqueness of assignment between buyers and sellers is a desirable auction quality. Prices of electricity in different places should differ from each other by the transmission usage cost, the cost of transmission losses, and arbitrage costs. If this were not true, arbitrage opportunities to sell/buy electricity from one place to another would quickly act to make it so. This does assume that power system capacity be sufficient (e.g., no congestion), and this leads to the second category for determining the desired market, the physical power system. Pricing methods must encourage power system expansion in the right direction. New efficient generating units and transmission lines should be built to connect to the congested areas. Gas markets throughout the U.S. have unified and become increasingly competitive market since deregulation. Support that claim is the fact that the differences of gas prices of different gas markets evolve by diminishing and approaching the transportation and arbitrage costs [Michaels, 1995].

Power systems must be operated reliably and economically. Criteria ensuring both reliable and economical usage of power systems and possible tradeoffs must be specified. Reliability can be separated into adequacy (enough generation and transmission capacities for customers) and security (ability to operate the system safely in the present of disturbances) [McCalley, 1999a]. Ancillary services are required for reliability of the system. Increasing the requirements for ancillary services may result in a more reliable system, but will result in a higher cost. In the profit-based operation, transmission systems' operating margins may be relaxed as much as possible to increase line usage. This could lead to major outages if the limits are set poorly. Presently, transmission systems are still regulated, and the limits are set by TRANSCOs and approved by the ICA. If the transmission systems are deregulated in the future, the limits that are set by TRANSCOs must continue to be reviewed carefully by the ICA. The technology used in power systems needs to be improved for the competitive market in which operations and planning are getting much more complicated.

There should be several choices of electricity and several choices of financial contracts available for trading. Electricity is normally viewed as a homogeneous product. However, electricity contracts could be

viewed as various heterogeneous products provided different contracts specify aspects of the electricity to be delivered (e.g. its availability, which indicates certainty that the electricity will be received by the buyers). This additional feature will allow more alternatives in consumption of the consumers. The differentiation of electricity also helps reduce market power consequently. The number of differentiation should not be too great because of possible difficulties in satisfying the dynamic properties of system operation. Risk is an important issue in doing business in the competitive market. Risk could be defined as the variance of return [Marshall, 1989]. The more the expected profit is, the more the risk could be. This is why there should be several types of financial contract types available to the markets. The most prevalent types of financial contracts are forward contracts, futures contracts, options contracts, and swap contracts. The availability of several contract types allows the participants in the market to maintain portfolios with desired levels of profit and risk.

Public information announced by the ICA should be freely available so that every market participant has symmetric information. The procedure for matching bids and performing optimal power flow should be clearly explained to the bidders. To achieve the symmetric information, the communication system should allow traders who are located far away from the ICA to participate in trading and to receive the information at the same time as those who are near the ICA. Even retail customers should have good source of information so that they know what they can do to get cheap electricity. There could be many items in the electric bills of a price-based market. Many of these items do not appear in the regulated electric market because of vertically integrated operation allows generation, transmission, and distribution costs to be lumped together. The explanations of billing and charging rates must be sufficiently clear that customers can choose the right suppliers.

1.3 Scope of this work

The majority of this work is aimed to help develop markets to achieve characteristics of the ideal market. The problem is viewed from the point of a regulator to implement a market that exhibits social welfare maximization, which can be achieved by a competitive market, and that achieves Pareto efficiency. Additionally, the problem is examined from the viewpoint of an Independent System Operator (ISO) required to maintain the reliability of the economic power system. Although this work is primary from the market regulator viewpoint, research for the GENCO viewpoint is included. Information for bidding strategy and market reach enhancement method is developed.

The steady state solution of a competitive market is called its competitive equilibrium. Economic theory requires that every supplier (GENCO) produces at the same marginal cost, which is equal to the competitive equilibrium price. The competitive equilibrium price should be equal to the system marginal cost for an ideal market. The marginal cost is calculated in the economic dispatch of all the operating generating units in the system for an hourly auction. This is equivalent to a power pool when the pool is dispatching all generating units. Transmission usage costs and transmission loss costs differentiate the prices in different locations. When the ideal conditions are not achieved, pricing becomes difficult because of the externalities. Externalities, which

are internalized in the vertically integrated operations, need to be distinguished according to their sources. The procedure to distinguish the externality sources must be carefully performed so that the pricing schemes are based on the actual physical costs. The inappropriate opportunity costs must not be taken into account. Good pricing criteria are summarized and the pricing method following good pricing criteria is developed.

Note that the competitive equilibrium considered is the partial equilibrium because it includes the effects of only the electricity market. Other product markets can also affect the price in the electricity market. The demand of electricity can be affected by the supply of competitive products. Specifically, those products can replace electricity. For example, natural gas is a substitute product of electricity for heating systems. If the price of natural gas is lower than the equivalent price of electricity for the same process, this will decrease the demand for electricity. A solution including all interactions of other related markets is called a general equilibrium. The average price is expected to be the price bid under normal conditions. Thus, the fixed costs are recovered. The average price each hour may include varying amount of the fixed costs dependent upon the probable success of being matched in an auction. Some hourly prices may even be negative to guarantee a match with a buyer instead of violating an operational constraint (e.g. minimum up-time). The submitted bid prices over a given time period, such as a month, are expected to equal the average cost plus profit.

Fairness and uniqueness of assignment between buyers and sellers is a desirable auction quality. A LaGrangian relaxation (LR) Centralized Daily Commitment Auction (CDCA) has been implemented. It has been shown that the solution might not be optimal nor fair to some generation companies (GENCOs) when identical or similar generating units participate in a LR CDCA based auction. Supporting information for bidding strategies on how to change unit data to enhance the chances of acceptance of GENCO bids has been developed [Dekrajangpetch, 1999c]. The bidding strategy information takes advantage of convergence problems with this type of auction.

The majority of this work is based on Single Period Commodity Auction (SPCA). Alternative structures for the SPCA are outlined [Dekrajangpetch, 1999d]. Whether the optimal solution is degenerated in the primal or dual problem is investigated. It can be shown that the solution is not usually degenerate. Degenerate solutions are not allowed for auctions because assignment fairness and solution uniqueness is required. Electricity is generally considered as a homogeneous product. When availability and expected energy served (EES, will be defined in chapter 5) are used as additional characteristics to distinguish "types" of electricity, electricity can be considered a heterogeneous product. The procedure to trade electricity as a heterogeneous product is developed.

The SPCA is formulated as a linear program. Interior-point linear programming (IPLP) is more efficient than the simplex method for solving large linear programs. The basic IPLP is unable to find an exact optimal solution. IPLP finds a solution that is very close to the optimal solution. Linear-programming-based sensitivity analysis (which will be called sensitivity analysis throughout this work) cannot ordinarily be done with IPLP. Sensitivity analysis is very useful for auctions. Thus, sensitivities to determine alternative solutions are not readily available. Exact solutions are a necessity in an auction. The basic affine-scaling primal IPLP algorithm

has been extended [Dekrajangpetch, 1999b]. This extended algorithm can find an exact optimal solution and can recover the optimal basis. The great benefit of recovering the optimal basis is that sensitivity analysis can be performed as in the simplex method. Sensitivity analysis is used to determine market power and market reach, as explained below. Additionally, sensitivity analysis is used in combination with the investigation of historical auction results to provide raw data for power system expansion.

Market power is a critical issue in electric power deregulation. Firms with market power have an advantage over other competitor firms in terms of market reach capability. Market reach capability is the ability to get high-profit customers. Various approaches to determine market power and market reach are to be investigated. How firms can acquire additional customers or additional transactions, given the auction results, is to be investigated. Additionally, how firms can utilize their market power (if they have any) to enhance their chances of success is to be investigated.

1.4 Contents of this dissertation

Chapter 2 presents market and auction structures used in this work. Optimization techniques used for implementing auctions and linear programming-based sensitivity analysis are introduced. In chapter 3, the good pricing criteria are summarized and the developed pricing technique is illustrated. The resulting prices take generation costs, transmission loss cost, and transmission usage costs into account.

In chapter 4, degeneracy and multiple optima are discussed. The formulations for optimal matching are developed for cases in which different criteria are used for auctions. Part of chapter 4 is reprinted from Electric Power Systems Research Journal, Somgiat Dekrajangpetch and Gerald B. Sheblé, Structure and Formulations for Electric Power Auctions, Copyright 1999, with permission from Elsevier Science. One criterion is to use availability and expected energy served (EES) levels to treat electricity as several heterogeneous products. In chapter 5, the procedure for bidding different classes of electricity is explained. The procedure includes the integration of the optimal bidding problem with the optimal remedial action problem. Chapter 6 extends the introduction of the auction structures presented in chapter 2. In chapter 6, the auction formulation when the ancillary services are included is discussed. Manipulation for hard constraints and alternative auction structures are discussed. Chapter 6 is reprinted from the Proceedings of the 60th American Power Conference, volume 60-1, Somgiat Dekrajangpetch and Gerald B. Sheblé, Alternative Implementations of Electric Power Auctions, pages 394-398, Copyright 1998, with permission from American Power Conference.

Chapter 7 demonstrates the extended IPLP algorithm and its application to auction problems. Chapter 7 also presents case studies applying linear programming-based sensitivity analysis to bid adjustment and transmission line limit alternation. Chapter 7 is reprinted with permission from IEEE Transactions on Power Systems, PE-068-PRS, Somgiat Dekrajangpetch and Gerald B. Sheblé, Interior-Point Linear Programming Algorithm for Auction methods, Copyright 1999. In chapter 8, market power measurement is explained along

with an illustrative example using the modified Lerner's index. The method to enhance market reach is presented. In chapter 9, auction method application to power system expansion is explained.

Chapter 10 presents the bidding selection problems of LaGrangian relaxation-based auctions and develops the bidding information for bidding strategy generation for this type of auctions. The illustration shows how the smart bidder can take advantage of the bidding selection problems encountered when implementing an auction by LR. Chapter 10 is reprinted from Electric Power Systems Research Journal, volume 52, Somgiat Dekrajangpetch and Gerald B. Sheblé, Bidding Information to Generate Bidding Strategies for LaGrangian Relaxation-Based Power Auction, pages 87-96, Copyright 1999, with permission from Elsevier Science. Finally, Chapter 11 summarizes this dissertation.

2 FRAMEWORK AND OPTIMIZATION BACKGROUND

2.1 Market framework

The market framework used in this work is based on recent papers [Sheblé, 1996a], [Sheblé, 1996b], [Sheblé, 1994a]. These papers have proposed that North American Electric Reliability Council (NERC) would set the reliability requirements. NERC establishes all procedures and standards. Energy service companies (ESCOs) have emerged in this new framework. ESCOs provide the energy services at a given quality and reliability that energy customers buy under contract. Generation companies (GENCOs) provide the electricity and associated ancillary services to ESCOs and other large customers. An independent contract administrator (ICA) provides the combined services of the independent system operator (ISO) and the regional transmission group (RTG) for all players of the market including brokers and marketers (BROCO). A power exchange (EMA) provides an organized way of interchanging transaction contracts and may exist for only the spot market or may serve forward, futures, and planning markets in addition to the spot market. Transmission companies (TRANSCOs) provide long distance transportation of electricity generally at high voltages, over the transmission lines. Distribution companies (DISTCOs) provide transportation of electricity generally at low voltages, through the distribution lines. Figure 2.1 shows the proposed framework.

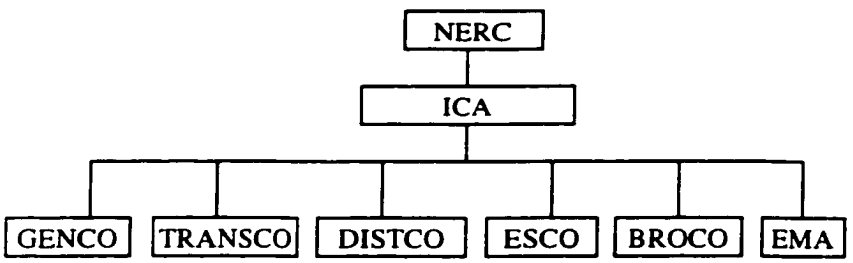

Figure 2.1 Framework of the energy market

2.2 Auction framework

An auction is defined as "a market institution with an explicit set of rules determining resource allocation and prices on the basis of bids from the market participants" in [McAfee, 1987]. The major types of auctions for electric power can be classified into centralized daily commitment auctions (CDCAs) and single period

commodity auctions (SPCAs). Each of these can be sub-classified by various criteria. The first sub-classification divides the auctions into single-sided and double-sided cases. Single-sided auctions allow only GENCOs to bid while double-sided auctions allow both GENCOs and ESCOs to submit bids. A second sub-classification is that of uniform and discriminating pricing. Uniform pricing means every seller gets paid the same price and every buyer pays the same price while discriminating pricing means each seller gets paid and each buyer pays corresponding to their bids. GENCOs and ESCOs can be sellers or buyers in double-sided auctions. For single-sided auctions, GENCOs are sellers.

In the monopolistic environment, inter-utility power interchange has been common between utilities. The utilities having more expensive production buy energy from the utilities with less expensive production that have excessive capacity through interconnections. Energy brokerage systems and power pools are well-known methods for power interchange. Power pools are coordinated groups of utilities in which centralized unit commitment (UC) is performed across the entire power pool to have greatest savings. Energy brokerage systems and power pools are illustrated in detail in [Wood, 1996]. Under the traditional brokerage system, power interchange transactions are set up by central brokers in each period, e.g., hourly. The central brokers match the bids subject to certain rules and announce the accepted transactions.

A comparison of the inter-utility power interchange procedures in the traditional environment with auctions in the new environment shows that power pools are similar to CDCA and energy brokerage systems are similar to SPCA. The salient difference is that only GENCOs participate in power pools and energy brokerage systems while GENCOs and ESCOs participate in auctions. Another difference is that the bids of the participants are based on their true cost or revenue functions (plus some rate of return) in power pools and energy brokerage systems, while bids of GENCOs and ESCOs can be any value the bidders desire in auctions.

2.2.1 Centralized daily commitment auction (CDCA)

An example of a CDCA is the power pool auction as implemented in the United Kingdom and some portions of the United States. Since the bids are submitted to the authority controlling the power system, this work assumes that they are submitted to the ICA (i.e., ISO in California). For single-sided auctions, GENCOs submit their generation cost models to an ICA, and ESCOs submit their hourly loads to ICA. Then the ICA performs a unit commitment (UC) analysis using LR for the system for a specified period, e.g., 24 or 168 hours. After the ICA finds the optimal solution, the optimal schedule is reported to each GENCO, and the optimal cost is reported to each ESCO. In a double-sided auction, ESCOs are also allowed to bid for power by submitting a set of pseudo-unit parameters to the ICA. This work focuses on single-sided CDCA. The detail of the double-sided CDCA can be seen in [Dekrajangpetch, 1997]. Indeed, even though ESCOs do not represent generating units explicitly, ESCOs would gain advantage by proper manipulation of pseudo-unit parameters in the CDCA. An ESCO's pseudo-unit parameters are found by constructing an equivalent unit to achieve a specified revenue function. The details of ESCOs revenue functions are described in [Dekrajangpetch, 1997].

From the auction definition [McAfee, 1987] as described above, the CDCA can be considered an auction in the sense that the electricity allocation and prices are determined on the basis of bids from GENCOs (and ESCOs). The point of contention is that in the traditional environment the bids from GENCOs are mandated to be the true cost functions (plus some rate of return) and the bids of ESCOs (if they exist) are mandated to be the true revenue functions (plus some rate of return). The participants still bid, but they are restricted to bidding their costs. It is mainly a matter of semantics, and for the purposes of discussion and implementation this work assumes the CDCA to be a true auction.

2.2.2 Single period commodity auction (SPCA)

The SPCA is an auction commonly used for commodity exchange. The auction is to provide power for a single period, which can be any length of time, e.g., 15 minutes, half an hour, or one hour. However, the SPCA can be enhanced for use with auctions for multiple time periods, e.g., one day. In this research the SPCA is used for electric power transactions. For the single-sided SPCA, GENCOs submit offers and ESCOs submit their incremental loads to the ICA. The bid is basically composed of a price and an amount for energy. The bid may have other components, e.g., spinning reserve, supplemental reserve, if these components are bundled. The ICA finds the optimal match of the bids by minimizing the total cost. For double-sided SPCA, ESCOs are allowed to submit offers or bids for selling or buying power. This work focuses on double-sided SPCA. Details of the single-sided SPCA can be seen in [Dekrajangpetch, 1997]. In the explanation throughout this work, GENCOs are assumed to be sellers and ESCOs are assumed to be buyers. Although ESCOs do not have explicit cost functions to calculate bid parameters like GENCOs, ESCOs do build revenue models and use them for calculating bid parameters. Even though they do not represent generating units explicitly, ESCOs would gain advantage by proper manipulation bid parameters in the SPCA.

A common formulation for the double-sided SPCA used in this work is shown in (2.1). This work enhances the formulation of SPCA from what was previously developed in [Kumar, 1996a]. One of the most notable enhancements is the development of transmission cost formulation. The derivation of the transmission cost formulation is shown in (2.2). The transmission cost is added to the objective function. Some parts of this work neglect the transmission cost without loss of generality. The transmission line flow constraints are always treated as hard limits. This formulation assumes that real power and reactive power are bid in different markets. In other words, the real power and reactive power are unbundled. To operate the market securely, there must be a linking between the real and reactive markets. The linking in an unbundled set of markets uses an estimated real power limit of series equipment in the real power market and uses another estimated reactive power limit of series equipment in the reactive power market. Actually such series equipment should be represented with only an MVA limit. The unbundled market requires that the real and reactive power limits are estimated from the MVA limit. This research will not discuss this estimation detail. The author is convinced that this linking issue demonstrates the need for a market where real and reactive power are bundled. The majority of this work demonstrates only the auction in a real power market. Since the real and reactive power are unbundled, the fast-

decoupled power flow can be solved independently. Although real and reactive power are unbundled, the effect of the reactive power on the transactions is reflected in the shadow prices in the real power market based on the estimates of the real power flow limits. The interactions of shadow prices of both markets occur through the linking between the real and reactive power limits.

Another way to implement auctions is to bundle real and reactive power markets. The formulation for this type of auctions including ancillary services is illustrated in chapter 6, [Dekrajangpetch, 1998]. A comparison of unbundled and bundled real and reactive power markets are also discussed in chapter 6. For the bundled market, the interactions of shadow prices of both markets occur directly.

Double-sided SPCA formulation:

$$
\begin{aligned}
&\min_{\Delta P_{bj},\Delta P_{si},\Delta\delta_i,\Delta\delta j} \quad \sum_{i=1}^{m} c_{si}\Delta P_{si} - \sum_{j=1}^{n} c_{bj}\Delta P_{bj} + \sum_{i=1}^{m+n} trc_i \Delta\delta_i \\
&s.t. \\
&\underline{\Delta P} - B'\underline{\Delta\delta} = \underline{0} \\
&\sum_{i=1}^{m}\Delta P_{si} - \sum_{j=1}^{n}\Delta P_{bj} - \underline{lsc} * \underline{\Delta\delta}^{T} = 0 \\
&P_{ij}^{0} - B'_{ij}(\Delta\delta_i - \Delta\delta_j) \le P_{ij}^{\max} \\
&-P_{ij}^{0} + B'_{ij}(\Delta\delta_i - \Delta\delta_j) \le P_{ij}^{\max} \\
&0 \le \Delta P_{si} \le B_{si} \\
&0 \le \Delta P_{bj} \le B_{bj}
\end{aligned}
\tag{2.1}
$$

The symbols are clarified as follows:

c_{bj}	price of jth buyer's bid
c_{si}	price of ith seller's bid
ΔP_{bj}	accepted amount of power of jth buyer
ΔP_{si}	accepted amount of power of ith seller
n	number of buyers
m	number of sellers
$\Delta\delta$	change in bus angle
B'	matrix containing the negative of susceptance of the bus admittance matrix (Y matrix)
B_{si}	amount of power submitted by ith seller
B_{bj}	amount of power submitted by jth buyer
lsc	loss coefficient vector (details can be seen in [Dekrajangpetch, 1997])
P_{ij}^{0}	original flow of line between buses i and j

P_{ij}^{max}	flow limit of line between buses i and j
trc_i	transmission cost coefficient for bus i

Note that the underscored variables indicate vectors. All the quantities in the formulation are in per unit, except bus angles that are in radians and the bid prices that are in \$/MWh. The fast-decoupled power flow is used and thus the B' is a constant matrix. The formulation above includes only real power relationships because the auction has been unbundled. All the variables in the formulation are non-negative except $\Delta\delta_i$ and $\Delta\delta_j$ that are free variables. The objective function minimizes the negative of trading surplus and the change in transmission cost. In other words, the objective function maximizes the trading surplus and minimizes the change in transmission cost simultaneously. The trading surplus is defined as the total difference in dollar values between ESCOs' accepted bids and GENCOs' accepted bids. The dollar value of a GENCO or an ESCO bid means the multiplication of the submitted price and the accepted amount. The constraints are taken from the OPF. The first constraint is the active power flow relationship. The second constraint restricts the slack injection. The next two constraints restrict the flow on network branches. The last two constraints restrict the bids that sellers and buyers submit.

The change in total transmission cost ($\Delta trcost$) is shown in (2.2). Note that Cf_{ij} is the cost of transmitting energy 1 pu from ith bus to jth bus. The term inside the bracket is ΔP_{ij}. The cost of transmission increases (decreases) when power flow in a line increases (decreases) over the flow of the period before the auction. This corresponding change in transmission cost and transmission flow is captured by the terms $P_{ij}^0/|P_{ij}^0|$. The upper equation can be written in the form of the lower equation so that the change in transmission cost is represented as a function of changes in bus angles.

$$\begin{aligned}\Delta tr\cos t &= \sum_{i=1}^{m+n}\sum_{\substack{j=1\\ j>i}}^{m+n}\frac{P_{ij}^0}{\left|P_{ij}^0\right|}Cf_{ij}[-B'_{ij}(\Delta\delta_i-\Delta\delta_j)] \\ &= \sum_{i=1}^{m+n} trc_i\Delta\delta_i\end{aligned} \tag{2.2}$$

2.3 Optimization techniques

The methods for matching bids in auctions are based on optimization techniques. Various auction structures may be implemented properly and efficiently with different optimization techniques. The power pool auction (CDCA) in the United Kingdom is implemented by LaGrangian relaxation (LR) while the SPCA in New Zealand is implemented by advanced dual simplex and interior-point methods. In [Dekrajangpetch, 1997], different optimization methods are utilized to implement different types of auctions. The optimization methods

considered are LaGrangian relaxation (LR), interior-point linear programming (IPLP), and upper-bound linear programming (UBLP).

LR is an optimization technique that decomposes the main complex mathematical programming problem into simple subproblems that are additively separable by relaxing the hard constraints, e.g. coupling constraints. Each subproblem is coupled through common LaGrangian multipliers, one for each period. Each subproblem is solved separately. The LaGrangian multipliers at each iteration are updated until a near-optimal solution is found. The quality of the solution is characterized by the "duality gap." The duality gap is the spread between the primal and the dual objective function values. Larger gaps indicate more uncertainty and hence a lower quality solution than do smaller gaps.

UBLP is built on the simplex method but has a few notable differences. The major difference is that instead of implementing the upper-bounds of variables as the normal constraints of the standard form, the upper-bounds of variables are treated in the same way as the non-negativity constraints. In this way the dimension of the constraints are greatly reduced which helps to reduce the computing and storage requirements.

IPLP reaches a solution by moving through the interior of the feasible region. The movement is different from the simplex method in which solution point changes from one vertex to the adjacent vertex until the optimal solution is found. IPLP is unable to find an exact optimal solution, but rather finds a solution that is very close to the optimal solution. Chapter 7 will explain IPLP in details.

For single-sided and double-sided CDCA, only LR is applied to these types of auctions because of the nonlinear nature of the problem. The concepts of quadratic and concave revenue functions and finding the optimal price via the intersection of aggregate GENCOs' incremental cost curve and ESCOs' decremental revenue curve are developed for the double-sided CDCA. Single-sided and double-sided SPCA, LR, IPLP, and UBLP are applied to these types of auctions; the illustrations provide a good example of choosing a suitable optimization method to implement each type of auctions. The illustrations also provide insight on how to apply these optimization methods to similar types of auctions.

2.4 LP-based sensitivity analysis

LP-based sensitivity analysis is the method to calculate the new solution from the old solution when there are some moderate changes in the LP problem. The method allows calculating the new solution by without resolving the new LP problem resulting from the changes. For this purpose, LP-based sensitivity analysis is performed when it takes less calculation than resolving the new LP problem. Otherwise, the new LP problem is resolved. LP-based sensitivity analysis will be called sensitivity analysis throughout this work except in chapter 10. In chapter 10, sensitivity analysis is studied by resolving the CACA problems, which are nonlinear. The changes in the LP problem are composed of changes in the cost coefficient, the right-hand-side (RHS) vector, variables, or the technological coefficient matrix (A-matrix). In practical industrial problems, some of the data used to formulate the LP problem comes from estimation. These estimated data change from time to time

because of uncertainties in estimation. In addition, some data that do not come from estimation also change from time to time, resulting from changes in various factors (e.g., changes in input prices, production capabilities etc.) In auction problems, examples of changes in parameters are changes in demand, and required amount of spinning reserve.

Sensitivity analysis may be performed to find the changes in parameters needed for the desired new solution. For this purpose, sensitivity analysis is performed even though it takes more calculation than does resolving the LP problem. Sensitivity analysis can give the relation of the new solution to the changes in parameters, and the changes in parameters can be selected from this relation to achieve the desired new solution. In auctions, this type of sensitivity analysis is commonly needed for the bidders and the ISO. The bidders need to study how they can change bid parameters to maximize their profits. The ISO needs to study how they can change the operational parameters to achieve higher social surplus, e.g., how to change transmission fees to reduce crowding effect of transmission line using. Parametric analysis is used to study how the solution changes when either objective function or constraints are perturbed in a certain constant direction. The details of sensitivity analysis and parametric analysis are well illustrated in [Bazaraa, 1990, Hillier, 1995].

Note that the explanation of sensitivity analysis in this work involves the optimality condition of LP problems. This condition is that at optimality, the RCC of all nonbasic variables are nonpositive. The nonpositive RCC of the nonbasic variables indicate dual feasibility, which is required for optimality.

2.5 LP tracing method

The pricing method developed in this work is based on the tracing procedure during iterations while the simplex method is used for solving auction solutions. In an iteration of the simplex method, solution points move from the starting solution to the adjacent vertex that improves the objective function the most. The solution points keep moving to the next adjacent vertices (that keep improving the objective function) until the optimal solution is found.

The LP tracing method calculates the changes of variables when the solution point changes from one vertex to another vertex. The final solution is calculated from the summation of all changes from the beginning to the end of the simplex iterations. The LP tracing method is important for pricing in electric power auctions. The major reason is that the LP tracing method can identify the power being sold from whom to whom, which is the important information for the pricing method developed. Although the final solution is known at the end of the simplex method, the final solution just indicates the total accepted bid amount of each GENCO and each ESCO. The final solution does not indicate that how much power is sold from each GENCO to each ESCO. By using the LP tracing method, the changes of solution points between iterations indicate how much power is sold from each GENCO to each ESCO. By summing this information for all iterations, the total sold amount of each GENCO to each ESCO can be known.

Details of applying LP tracing method to the pricing method are presented in chapter 3. An illustrative example of the LP tracing method is shown below. A simple linear program is used for illustration. There are two decision variables, x and y. Table 2.1 shows the solution point in each iteration. The simplex method takes two iterations to find the optimal solution for this small problem. Table 2.2 traces the changes between iterations. From the tracing result between iterations 0 and 1, change of y for 2 units contributes to improvement of the objective function for 10 units. From iteration 1 to 2, change of x for 3 units and change of y for 1 unit contributes to improvement of the objective function for 2 units. Supposed that the objective function is the trading surplus and the trading surplus is to divided between x and y, y will get more trading surplus than x because y contributes more to the improvement of the objective function than x. Note that the summations of changes are shown at the end of Table 2.2. The summations of changes are equal to the final solution shown in Table 2.1.

$$\text{Max} \quad 5y - x$$

s.t.

$$3y - x \leq 6$$

$$y \leq 3$$

$$x \leq 3$$

$$x, y \geq 0$$

Table 2.1 Solution point in each iteration

Iteration	x	y	Objective Function
0	0	0	0
1	0	2	10
2	3	3	12

Table 2.2 Changes in solution points between iterations

Iterations	Change in x	Change in y	Change in Objective Function
0 to 1	0	2	10
1 to 2	3	1	2
Total Change	3	3	12

3 PRICING STRUCTURE

3.1 Chapter overview

Pricing is currently a topic of much discussion. The difficulty associated with pricing electricity arises because the fact that the flow of electricity follows Kirchoff's law. When multiple transactions occur simultaneously, the power flow resulting from one transaction is affected by the power flowing as a result of other transactions. Nodal pricing has been proposed because the prices reflect the real-time operating conditions. However, there have been many debates regarding the problems associated with nodal prices. This chapter describes and proposes good criteria for pricing schemes and discusses the problems of nodal pricing and why nodal pricing violates the good pricing criteria. A new pricing method is developed by tracing the important pricing variables between iterations in the simplex method, which is used to implement auctions. The developed pricing method meets the proposed good pricing criteria. An example illustrates the developed pricing technique.

3.2 Introduction

One of the most important issues in the deregulated electric power industry is pricing. The issue is how much the sellers and buyers should pay for the electricity. Unlike other ordinary goods, electricity has a much more complex transmission component. Transmitting electric energy from one place to another is more complex than transporting other commodities because current follows Kirchoff's laws, the laws of physics describing the relationship between electrical voltage, current, and power. In addition, transmission loss occurs while the electricity is transmitted through the lines. Transmission losses and flows generated by a transaction depend not only on the associated transaction but they also depend on other transactions. This gives rise to externalities in electric power market. It has been controversial to define externality explicitly. In brief, externality could be thought of as the situation that the utilities or production functions of other economic agents are affected by the action of one economic agent [Cornes, 1996]. In the past when the electric power market was regulated, these externalities were internalized via the coordination efforts of the central system operator in a power pool.

The externalities are tied to the issues of opportunity cost or lost-opportunity charge. The concept of the opportunity cost in power transactions is based on transmission constraints being at their limits (e.g., thermal limits, voltage limits) which causes the more expensive resources to be utilized. The concept is to embed the lost-opportunity charge collected for the lost-opportunity entities in the pricing rule. The opportunity cost could be separated into two main categories—opportunity cost for the sellers (GENCOs) and opportunity cost for the transmission line owners (TRANSCOs). Note that GENCOs are assumed to be sellers and ESCOs are assumed to be buyers for all the discussions.

The uplift approach used in the United Kingdom falls into the category of the opportunity cost for GENCOs. When transmission is at the limit, some of the power is taken from the more expensive GENCOs instead of the GENCOs that could supply the power less expensively if the transmission constraints were not active. The less expensive GENCOs are paid an amount equal to their lost-revenue and these charges are divided uniformly (based on the consumed amount) to all customers. The details of the uplift approach are well illustrated in [Bialek, 1997].

The nodal price approach falls into the category of the opportunity cost for TRANSCOs. When transmission constraints are active, additional transactions may go unselected during the bidding process and this, in turn, could prevent additional transmission lines from being utilized. Nodal pricing requires the calculation of the spot price of each bus (which is called nodal price). GENCOs are paid at the unit price equal to the nodal price for their locations, and ESCOs pay the unit price equal to the nodal price for their locations. The difference between the payment of an ESCO at one end of the constrained transmission lines and the total revenues of the GENCOs that supply the power to the ESCO at other ends is called congestion surplus. Congestion surplus is referred to as congestion rent or merchandise surplus in some literature. The nodal pricing concept assumes that the congestion surplus is used to finance the TRANSCOs.

The usefulness of and problems with the opportunity cost concept have been debated [Anderson, 1992, Calviou, 1993, Bialek, 1997, Oren, 1995, Singh, 1997, Hogan, 1992]. This work provides a new pricing method that is not based on the opportunity cost. The method utilizes the information obtained during the iterations of the simplex method of linear programming, which is used to find the auction solutions. Note that the pricing method illustrated assumes that transmission systems are regulated. This assumption is valid within the market framework currently used in several places undergoing restructuring.

Major reasons to exclude the opportunity cost from the method are: (1) opportunity cost is not the real physical cost resulting from transactions that customers should be responsible for, and (2) the use of opportunity cost may result in no power system expansion to achieve competitive market. If the opportunity cost is paid to the GENCOs, the GENCOs may have no incentive to build new efficient plants in the load areas that do not have enough generation. On the other hand, if the opportunity cost is paid to the TRANSCOs, there might be no incentive for the TRANSCOs to build new efficient transmission lines. This leaves the efficient generating units unconnected from the loads that are blocked out from the efficient sources resulting from the constrained transmission lines.

Section 3.3 describes the criteria for good pricing schemes. Section 3.4 outlines the nodal pricing method and associated problems. Section 3.5 illustrates the pricing method developed in this work. Section 3.6 presents the results of the developed method. A four-bus system is used to implement the results. Section 3.7 concludes this chapter.

3.3 Good pricing criteria

Good pricing schemes should have at least the following five characteristics. First, the pricing schemes should be based on the actual physical costs that result from the transactions. The major physical costs belong to energy, loss, transmission usage, ancillary services, and charges covering for the traders who default. Second, the pricing schemes should have an incentive for investment in power system expansion. Third, the pricing methods should send the right price signals for power system expansion. In other words, the price signals should send the proper signal to indicate where to build new generating plants and/or transmission lines. For example, if an ESCO pays a very high price for energy, then more efficient generating units should be built at the location of that ESCO. It also can indicate that transmission lines should be built to connect the less expensive GENCOs to the ESCOs paying higher prices. Fourth, the pricing methods should encourage the GENCOs to offer at their true costs and the ESCOs to bid at their true revenues. This will help reduce gaming in the bidding process. Note that the word gaming is used in the sense that GENCOs and ESCOs choose some specific strategies for building their bid prices and amounts based on their price-making abilities. This definition is based on game theory described in [Silberberg, 1990]. Fifth, the pricing methods should be fair for the auction participants. The word fair is used in the sense that the resulted prices should be equitable to every participant. In other words, the resulted prices should not favor some participants but disfavor some other participants.

3.4 Nodal pricing method

Nodal pricing is based on the spot pricing technique. Spot price was defined as the marginal total cost with respect to the customer demand in [Schweppe, 1988] in which each customer could have a single price or a class of customers could have a single price. A superior characteristic of the spot pricing method is that it can reflect the real operating condition of the system. Spot prices vary with time and location depending on the network condition.

The concept of spot prices has been brought to the deregulated electric power market and is known as nodal pricing. A calculation method similar to that used in spot pricing except that the objective function of the optimization process changes from that of the regulated market is proposed for use in calculating the nodal prices. A nodal price is a single price for electricity delivered to a specified transmission node. A GENCO receives revenue corresponding to the price of electricity at the transmission node where the GENCO is located. Similarly, an ESCO's payment corresponds to the electricity price at the transmission node nearest to the ESCO. A single nodal price is composed of several major components: energy component, transmission loss component, and the component resulting from the active transmission constraints. The component of the active transmission constraints is the total effect of all different types of transmission constraints. The famous constraints are line limits and the associated component in the spot prices is called congestion component. The congestion component can be decomposed from the single spot price as illustrated in [Finney, 1997]. Apart

from nodal prices of real power, nodal prices are also calculated for the reactive power [Baughman, 1991, Hogan, 1993].

Nodal pricing has only one of the characteristics of the good pricing techniques, that is, spot prices send the right price signals that reflect the real operating conditions. The major problems of nodal pricing are that it is based on the opportunity cost and it results in congestion surplus. As explained above, an opportunity cost should not be used for charging because it does not represent the actual cost. The opportunity cost is calculated from the values of the linear programming dual variables (shadow prices) associated with a given constraint. A shadow price indicates the *likely* incremental improvement in the objective function achieved by increasing the RHS value for one unit, *provided that other things remain constant.* However, the shadow price does not exactly indicate the true change in the objective function. This is evident in the nonlinear objective function where the shadow price is just the slope of the tangent line, not the line that exactly lies on the objective function. In [Calviou, 1993], studies were performed and showed that the nodal price was charged on the basis of the generation costs, not the own costs of TRANSCOs. In addition, if only a few factors change, the shadow price can change tremendously. Thus, nodal prices could be very volatile depending on the operating and network conditions. Research has been studied and shown the volatility of nodal prices [Calviou, 1993, Singh, 1997].

The congestion surplus arises because ESCOs do not pay according to the prices of sources of power but instead pay according to the bus price at its location. It can be argued that this is unfair. The payment of an ESCO is higher than the total revenues of GENCOs that supply the power to the ESCO when the nodal price of the ESCO is higher than the nodal prices of the GENCOs. If the congestion surplus is subsidized for the TRANSCOs, the incentive for the TRANSCOs to build new (efficient) transmission lines for the congested area is reduced. The incentive to build new lines is reduced because TRANSCO revenues rise when transmission is constrained more and when the loss increases. Although nodal pricing may send the right price signals for building new transmission lines, if there is no incentive to build the lines, the price signals are not useful. In addition, arbitrage opportunities arising from the congestion surplus could result in strategic behaviors of the bidders [Oren, 1995, Singh, 1997]. The congestion surplus might not be enough to recover the invested cost of the TRANSCOs [Calviou, 1993, Rudnick, 1995, Schweppe, 1988].

A tracing method has been developed and proposed to eliminate the congestion surplus from nodal pricing [Bialek, 1997, Bialek, 1996]. The tracing method is incorporated to the final solution to calculate the amount of power sold by each GENCO to each ESCO. This method still uses nodal pricing but changes the payment rule so that ESCOs pay for the power according to the nodal prices of the power sources. ESCOs payments are equal to GENCOs revenues resulting in no congestion surplus. However, the method is still based on nodal pricing and thus parts of the payments are based on the opportunity cost (shadow prices), which does not represent the actual cost.

3.5 Proposed pricing method

3.5.1 Main concept

The main concept of this method is to price according to only the actual quantities, not according to the opportunity cost or the shadow prices. Examples of actual quantities used in pricing are bid prices, bid amounts, transmission loss, and transmission usage cost. In this work the TRANSCOs are assumed regulated and the transmission usage cost is based on MW-mile rates specified by regulators. The lines' MW-mile rates can be transformed to a rate that is with respect to each bus (trc_i) as shown in (2.2). The detail of transmission cost usage allocation will be explained in the next section. The MW-mile rates are calculated by a separate optimized pricing model, which must account for demand and supply of the transmission lines. The pricing of MW-mile rate is not within the scope of this work; however, it is well illustrated in the literature [Happ, 1994].

The distributed slack bus method using participation factors is utilized in assigning the transmission loss to the bidders. The tie bus is assumed to be the reference bus. Reference bus here means the bus that it serves as a reference bus (zero change in bus angle) in the active power flow (power-angle) constraint, not that it takes care of all the losses. GENCOs are assumed to supply the losses and ESCOs are assumed to pay for the losses. This means that GENCOs can exclude the loss costs from their offers' specifications. The amount of transmission loss payment assigned to each ESCO is based on the amount of the ESCO's accepted bid. Another major concept is the proper allocation of the trading surplus (which is defined in section 2.2.2) to each bidder so that there is none left with which players can game. The trading surplus is maximized and the change in transmission usage cost is minimized simultaneously in the objective function. The method for assigning transmission usage cost and allocating trading surplus will be explained in the next section.

The proposed method utilizes information generated each iteration of the simplex method applied to the pricing problem. The solution point changes from one vertex to the next each iteration. Without primal degeneracy discussed in a later chapter, the objective function value strictly improves. During an iteration, the values of one or more variables change. The proposed pricing method traces the value changes of variables from one iteration to the next and calculates a corresponding change in revenue and in the payment of each bidder. The summations of all value changes in the payment and revenue over iterations are the net payment and net revenue of the bidders.

In auction LP formulations, most of the calculated variables are incremental values, which represent the changes to values as a result of the transactions. The traced values between adjacent iterations indicate the changes of the incremental values. For simplicity in explanation, the word "incremental" will be omitted; for example, incremental accepted bid amounts will be referred as accepted bid amounts and their changes between iterations will be referred as changes of the accepted amounts.

There are three major quantities that need to be traced between iterations to assign the correct values of payments and revenues. The first quantity is the change in transmission loss. The second quantity is the change

in transmission cost and the third quantity is the change in trading surplus. These three quantities are the net changes between iterations and they must be assigned to each bidder properly. Due to the proper manipulation and approximation used in this work, the tracing of the change in transmission usage cost between iterations is not necessary and the assigned transmission usage cost to each bidder can be calculated once at the optimal solution. Details will be provided in the next section. The additional transmission loss can be assigned based on the amounts purchased by each ESCO as mentioned above. Note that other ancillary service costs can be priced similarly.

In summary, the changes in transmission losses from one iteration to the next are allocated to the ESCOs. The changes in quantity sold and purchased between iterations are allocated to the associated GENCOs and ESCOs. Then, the corresponding prices are calculated after the change in trading surplus is allocated. The changes in revenues and payments of each GENCO and ESCO are calculated between iterations and then are summed to yield the total revenues and ESCO payments at the final iteration. The transmission usage cost is assigned to each GENCO and ESCO and subtracted from the calculated revenues and payments to yield net revenues and payments for GENCOs and ESCOs. Finally, the prices are calculated by dividing the revenues or payments by the accepted quantities.

3.5.2 Allocation of transmission costs

Equation (2.2) indicates the transmission usage cost in terms of the bus angles. Equation (2.2) needs to be transformed into terms of accepted bid quantities. To reduce the difficulty in this transformation, the transmission loss in each line is neglected and the active power flow equation becomes that shown in (3.1). Equations (3.2) and (3.3) show the mathematical manipulation required to rewrite (2.2) as a function of the accepted bid amounts. Matrix B' is the matrix containing the negative of susceptance part of the Y matrix. Note that it excludes the reference bus. Coefficient k_i is the ith element of the vector that results from the multiplication of trc^T and $(B')^{-1}$.

The assignment of transmission usage cost to each bidder is subject to the quantity shown in (3.3), $k_i\Delta P_i$ for seller i and $-k_{m+i}\Delta P_{m+i}$ for buyer i. Equation (3.3) is very useful because it allows the assigned transmission usage cost of each bidder to be calculated only once at the optimal solution instead of calculating it in every iteration.

$$\Delta P = B'\Delta\delta \tag{3.1}$$

$$\Delta\delta = (B')^{-1}\,\Delta P \tag{3.2}$$

$$\Delta trcost = trc^T * \Delta\delta = trc^T (B')^{-1}\Delta P = k_1\Delta P_1 + \ldots + k_m\Delta P_m - k_{m+1}\Delta P_{m+1} - \ldots - k_{m+n}\Delta P_{m+n} \tag{3.3}$$

3.5.3 Trading surplus allocation

The main reason for tracing between iterations is that only the net accepted bid quantities will be known at the optimal solution. The quantity sold by each seller to each buyer and the associated losses are not known. From several cases of implementation, the results show that there are, at most, three accepted bid quantities change between iterations. This allows the algorithm to trace how much power is flowing from each GENCO to each ESCO. GENCOs who have negative changes in their accepted quantities during an iteration are viewed as buyers and ESCOs who have negative changes in their accepted quantities during an iteration are viewed as sellers. Determining the actual price is similar to what was used in the Florida Brokerage Exchange. In other words, for bid-offer pairs in which the bid is greater than the offer, the average of the sellers' offer and the buyer's bid is used as a uniform price. This is equivalent to dividing the trading surplus equally between the seller and the buyer. The numerical examples below will help explain this procedure.

Note that it might be possible to have more than three accepted bids change during iteration according to the general fact of the simplex rule. In the cases studied, there were, at most, three accepted bid quantities change between each iteration. This might be due to the structure of the auction problems considered. This could be an interesting topic for future research. In the event that more than three accepted bids change each iteration, there are two possible ways to handle it. First, trading surplus may be allocated between bidders based on some simple rules. Second, an elaborate analysis could be performed to trace the amount of power transacted between each seller and each buyer during an iteration by applying the method in [Bialek, 1997].

3.5.3.1 Only one GENCO and one ESCO having their accepted bids changed between iterations

In this case, trading surplus can be simply divided in half between the GENCO and ESCO. An example can be illustrated. Between iterations, GENCO 1 has 2 additional MW accepted; ESCO 1 has 1.92 MW changed in accepted amount; change of loss is equal to 0.08 MW. The submitted bid prices of GENCO 1 and ESCO 1 are 3 and 5 $/MWh, respectively. The average price is 0.5*(3+5), which is equal to 4 $/MWh. GENCO 1's revenue is 2*4, which is 8 $/h. ESCOs are assumed to pay for the loss and thus ESCO 1's payment is (1.92+0.08)*4, which is 8 $/h.

3.5.3.2 One GENCO and two ESCOs having their accepted bids changed between iterations

An example can be illustrated. Between iterations, GENCO 1 has 2 MW changed in accepted amount; ESCO 1 has 0.5 MW changed in accepted amount; ESCO 2 has 1.42 MW changed in accepted amount; change of loss is equal to 0.08 MW. The submitted bid prices of GENCO 1, ESCOs 1 and 2 are 3, 5, and 7 $/MWh, respectively. ESCOs are assumed to pay for the loss according to the accepted amount. ESCO 1 pays for the loss for the amount 0.08*0.5/1.92, which is 0.0208 MW. ESCO 2 pays for the loss for the amount 0.08*1.42/1.92, which is 0.0592 MW. Thus, GENCO 1 sells power to ESCO 1 for the amount 0.5+0.0208,

which is 0.5208 MW and the price of this transaction is 0.5*(3+5), which is equal to 4 $/MWh. GENCO 1 sells power to ESCO 2 for the amount 1.42+0.0592, which is 1.4792 MW and the price of this transaction is 0.5*(3+7), which is equal to 5 $/MWh. GENCO 1's revenue is 0.5208*4+1.4792*5, which is 9.4792 $/h. ESCO 1's payment is 0.5208*4, which is 2.0832 $/h. ESCO 2's payment is 1.4792*5, which is 7.3960 $/h.

3.5.3.3 Two GENCOs and one ESCO having their accepted bids changed between iterations

An example can be illustrated. Between iterations, GENCO 1 has 1.50 MW changed in accepted amount; GENCO 2 has 0.50 MW changed in accepted amount; ESCO 1 has 1.92 MW changed in accepted amount; change of loss is equal to 0.08 MW. The submitted bid prices of GENCOs 1 and 2, ESCO 1 are 3, 5, and 7 $/MWh, respectively. ESCOs are assumed to pay for the loss associated with the accepted amount. Thus, GENCO 1 sells 1.50 MW of power to ESCO 1, and the price of this transaction is 0.5*(3+7), which is equal to 5 $/MWh. GENCO 2 sells 0.50 MW of power to ESCO 1, and the price of this transaction is 0.5*(5+7), which is equal to 6 $/MWh. GENCO 1's revenue is 1.50*5, which is 7.50 $/h. GENCO 2's revenue is 0.50*6, which is 3.00 $/h. ESCO 1's payment is 1.50*5+0.50*6, which is 10.50 $/h.

3.5.4 Pricing characteristics of the proposal method

The pricing technique developed in this work exhibits good pricing characteristics. The price takes only the actual costs into account, e.g., the bid prices, and transmission usage cost. There is neither trading surplus nor congestion surplus left for gaming. The trading surplus for each transaction is divided equally between the GENCO and the ESCO. This helps distribute the prices more uniformly which encourages GENCOs to offer electricity at their true costs and ESCOs to bid at their true revenues, which helps reduce gaming. Because GENCOs and ESCOs receive and pay according to the amount of power they sell and buy, the pricing technique is considered fair.

Although the prices are distributed more uniformly, the effect of real and reactive power constraints is reflected in the pricing. For example, ESCOs that located at the congested areas will result in buying power from the more expensive GENCOs. This causes the rate charged by these ESCOs to be high. These high prices send the right price signals for additional generating units to be built in the congested areas or for new transmission lines to be built in order to eliminate the congestion. This pricing scheme also provides an incentive for power system expansion. For example, the GENCOs that have revenues limited due to transmission constraints may consider building the new plants where they are not constrained by the transmission. TRANSCOs that get low revenues due to transmission constraints may consider building new lines. The incentive arises because they do not receive any loss-opportunity charges that increase when the system is getting worse, e.g., more congested.

3.6 Results for an illustrative example

This section uses an example to illustrate the proposed pricing technique. The auction is assumed to be hourly. The four-bus system shown in Figure 3.1 is used for implementing the transmission constraints. There are three bidders in the system, two GENCOs (GENCOs 1 and 2) and one ESCO (ESCO 1). GENCOs 1 and 2 are sellers and ESCO 1 is the buyer. GENCOs 1 and 2 are located at buses 1 and 2, respectively and ESCO 1 is located at bus 3. Bus 4 is the tie bus.

Transmission line data is shown in Table 3.1. All lines are assumed to be 1 mile long and to have the same transmission usage price of 1 $/MW-mile. System base-MVA is 100 and system base-voltage is 230 kV. Table 3.2 shows the submitted and accepted bids. The result of each iteration of the simplex method is given in Table 3.3. Tables 3.4 and 3.5 demonstrate the tracing results from the proposed technique. The objective function is to maximize the trading surplus and minimize the transmission usage cost simultaneously. Thus, the objective function value is the transmission usage cost minus the trading surplus. Note that Tables 3.4 and 3.5 show that there are no changes in the quantities from iterations 1 to 7. The total amounts in Table 3.5 are calculated by summing all the changes between the iterations. Note that they are the same as the optimal solution at iteration 12 in Table 3.3. This verifies the accuracy of the result from tracing.

Table 3.6 shows the summary of the tracing and the resulting prices assigned to all bidders. The first two rows are taken from Table 3.5. The row entitled "Net Revenue/Payment" means net revenue for GENCOs and net payment for ESCOs. The row entitled "Net Sold/Bought Amount" means amount sold for GENCOs and amount purchased for ESCOs. The net sold or bought amount is the final solution from the simplex method. Net prices are calculated by dividing the net revenue/payment by the net sold/bought amount.

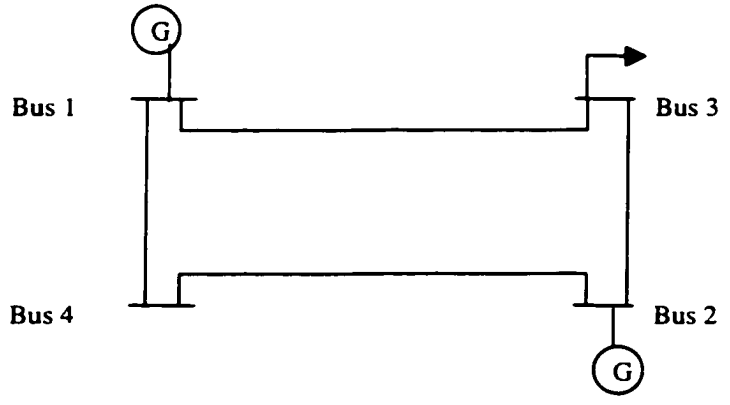

Figure 3.1 Four-bus system one-line diagram

Table 3.1 Data for the four-bus system

Line No.	From	To	Line Resistance (pu)	Line Reactance (pu)	Line Limit (MW)
1	1	4	0.0010	0.20	20.00
2	4	2	0.0010	0.20	30.00
3	2	3	0.0055	0.25	65.00
4	1	3	0.0040	0.20	75.00

Table 3.2 Submitted and accepted bids

Bids	GENCO 1	GENCO 2	ESCO 1
Price ($/MWh)	8.00	9.00	11.00
Submitted Amount (MW)	10.00	15.00	20.00
Accepted Amount (MW)	5.09	15.00	20.00

Table 3.3 Result of each iteration from the simplex method

Iteration	Accepted Bid of GENCO 1 (MW)	Accepted Bid of GENCO 2 (MW)	Accepted Bid of ESCO 1 (MW)	Transmis-sion Loss ($/h)	Trading Surplus ($/h)	Transmission Usage Cost ($/h)	Objective Function ($/h)
1, 2,..., 7	0.0000	0.0000	0.0000	0.0000	0.00	0.00	0.00
8	10.0000	0.0000	9.9526	0.0474	29.48	14.69	-14.79
9	10.0000	8.0013	17.9182	0.0831	45.09	17.97	-27.12
10	10.0000	8.0013	17.9182	0.0831	45.09	17.97	-27.12
11	10.0000	10.0924	20.0000	0.0924	49.17	18.83	-30.34
12	5.0910	15.0000	20.0000	0.0910	44.27	13.63	-30.64

Table 3.4 Tracing the changes over the iterations

Iterations	Accepted Bid of GENCO 1 (MW)	Accepted Bid of GENCO 2 (MW)	Accepted Bid of ESCO 1 (MW)	Transmis-sion Loss ($/h)	Trading Surplus ($/h)	Transmission Usage Cost ($/h)	Objective Function ($/h)
1 to 7	0.0000	0.0000	0.0000	0.0000	0.00	0.00	0.00
7 to 8	10.0000	0.0000	9.9526	0.0474	29.48	14.69	-14.79
8 to 9	0.0000	8.0013	7.9656	0.0357	15.61	3.28	-12.33
9 to 10	0.0000	0.0000	0.0000	0.0000	0.00	0.00	0.00
10 to 11	0.0000	2.0911	2.0818	0.0093	4.08	0.86	-3.22
11 to 12	-4.9090	4.9076	0.00	-0.0014	-4.90	-5.20	-0.30
Total	5.0910	15.0000	20.00	0.0910	44.27	13.63	-30.64

Table 3.5 Tracing the changes in revenues and payments between iterations

Iterations	GENCO 1's Revenue ($/h)	GENCO 2's Revenue ($/h)	ESCO 1's Payment ($/h)
1 to 7	0.00	0.00	0.00
7 to 8	95.00	0.00	95.00
8 to 9	0.00	80.01	80.01
9 to 10	0.00	0.00	0.00
10 to 11	0.00	20.91	20.91
11 to 12	-41.71	41.71	0.00
Total	53.29	142.63	195.92

Table 3.6 Summary of revenues, payments, and prices

	GENCO 1	GENCO 2	ESCO 1
Revenue from Table 3.5 ($/h)	53.29	142.63	0.00
Payment from Table 3.5 ($/h)	0.00	0.00	195.92
Transmission Usage Payment ($/h)	2.71	-7.97	18.89
Net Revenue/Payment ($/h)	50.58	150.60	214.81
Net Sold/Bought Amount (MW)	5.09	15.00	20.00
Net Price ($/MWh)	9.94	10.04	10.74

From the data and results (Tables 3.1 to 3.6), it can be seen that although GENCO 1 has a lower submitted bid price than GENCO 2, GENCO 1 sells less than GENCO 2. This can be explained from the result in iterations 11 and 12 in Table 3.3. It can be seen that GENCO 1's sale decreases from 10.00 MW to 5.09 MW and GENCO 2's sale increases from 10.09 MW to 15.00 MW. Table 3.4 shows that the trading surplus decreases by 4.90 $/h but the transmission usage cost decreases by 5.20 $/h. Because the transmission usage cost decreases more than the reduction in the trading surplus, the objective function value is improved. This is why GENCO 1's sale is less than GENCO 2's sale.

There are not any congested lines at the optimal solution, and this is why the prices of GENCOs 1 and 2 are very close to each other. The price of ESCO 1 is higher than those of GENCOs 1 and 2 partly because ESCO 1 pays for the transmission loss and partly because ESCO 1 pays for a higher share in transmission usage cost.

3.7 Chapter conclusions

Good pricing methods exhibit several properties or characteristics. It is difficult to find an electricity pricing technique that exhibits all of the good pricing characteristics, given the complexities of the transmission flow. The uplift approach is one of the simple approaches of electricity pricing and nodal pricing is one of the more complicated approaches. Neither of them satisfies all of the criteria of a good pricing technique. The nodal pricing method has a major drawback of using the opportunity cost (shadow prices) and allowing congestion surplus to remain.

A new pricing approach is developed in this work by tracing along the changes between iterations in the simplex method. The tracing is based on the conventional updating approach of the simplex method in which the solution points are updated based on the gradient direction. The ICA need to notify the bidders of this updating approach and may have the software accessible by the bidders. This will help the bidders understand the updating approach and so they can prepare the bids correspondingly.

The proposed method satisfies all of the criteria of a good pricing technique. The trading surplus is divided among the bidders according to the matched bids. Note that the shadow prices of the active transmission constraints should not be used because they are not the real costs. However, shadow prices may be publicly posted as additional pseudo price signals to aid the market participants in making good bids.

4 DEGENERACY AND AUCTIONS AS AN ASSIGNMENT PROBLEM

4.1 Chapter overview

Various market structures have been proposed for use in the electric power markets that have emerged throughout the world. Different market structures are needed for different regions of the world. Therefore, the available market structures being used today may not be appropriate for all regions that are restructuring to promote competition. Many of the market structures currently in use in deregulated regions of the world are being tweaked and adjusted in an attempt to improve their efficiency and suitability. In each of these market structures, there must be a mechanism for setting the price and product allocation. Very often, the appropriate mechanism is an auction. This chapter illustrates various auction formulations, each having different characteristics, applicable for various market structures. Formulations are presented based on the consideration of auctions as an assignment of products from sellers to buyers. Comprehensive formulations are developed for many more cases than previously available in the literature. This work clearly separates the cases based on commodity criteria, and thus the formulations can be easily modified for other cases that are not presented in this work.

One of the desired auction properties is to have unique results. Multiple optima should not occur and should be easily detectable if they do occur. This chapter discusses the general concept of multiple optima when implementing an auction in both primal and dual problems. The multiple dual optima conditions are analyzed for all the developed formulations.

4.2 Introduction

Auctions are considered to be a good pricing mechanism for competitive markets. There have been various auction structures proposed for electric power markets. The common types of auctions used for pricing and allocating electric power can be classified into centralized daily commitment auctions (CDCAs) and single period commodity auctions (SPCAs). An example of a CDCA is the power pool auction as implemented in the United Kingdom and some portions of the United States [Einhorn, 1994]. An example of a SPCA is the electric power auction used in New Zealand [Alvey, 1997]. The detailed characteristics of CDCAs and SPCAs are described in chapter 2.

The theme of this work is to illustrate various mathematical auction formulations when different characteristics are desired. General formulations are presented based on the consideration of auctions as an assignment of products from sellers to buyers. The focus of this work is on SPCAs and thus the formulations illustrated are for SPCAs. However, the formulations illustrated can be easily enhanced to be used with CDCAs. The formulations of a few cases have been presented in previous research [Thompson, 1992, Kumar, 1996a, Post, 1995, Fahd, 1992a]. However, this work presents formulations for many more comprehensive cases. In

addition, this work clearly separates the cases based on commodity criteria and thus the formulations can be easily modified for other cases that are not presented in this work.

One of the desired properties of an auction is to have unique results. Multiple optima should not occur and should be easily detectable if they occur. This chapter discusses the general concept of multiple optima in both primal and dual problems. The conditions when multiple dual optima happen are analyzed for all the developed formulations.

Section 4.3 discusses the general aspect of multiple optima and degeneracy in both primal and dual problems. Section 4.4 explains that auctions can be considered as an assignment problem and presents auction formulations for various market structures. The condition is analyzed for when multiple dual optima occur. Section 4.5 is the conclusion of this work.

4.3 Degeneracy

Degeneracy in linear programming (LP) occurs when an excess number of hyperplanes pass through an extreme point. In the case of n decision variables, degeneracy occurs when more than n hyperplanes pass through an extreme point. One cause of excess hyperplanes passing through an extreme point is that of redundant constraints. When linear programs are degenerate, the pivoting process moves from one basis to another basis and both bases represent the same extreme point. If the pivoting occurs in the same sequence over and over again, the solution stays at the same extreme point and the optimal solution cannot be found. This problem is called cycling. Rules designed to prevent cycling and to guarantee finite convergence of the simplex method can be seen in [Bazaraa, 1990].

Degeneracy at the optimal solution vertex in primal problem indicates that there may be multiple optima in the dual problem. Similarly, degeneracy at the optimal solution vertex in dual problem indicates that there are possibly multiple optima in primal problem. Multiple optima occur when hyperplane of the objective function is parallel to one of the hyperplanes that bounds the feasible region. Thus, it can be implied that if an excess number of hyperplanes pass through the optimal extreme point in the primal (dual) problem, the hyperplane of the objective function is probably parallel to one of the hyperplanes that bounds the feasible region in the dual (primal) problem. All the multiple optimal solutions yield the same optimal objective function value. Multiple primal optima and multiple dual optima occur individually or simultaneously. Multiple optima are not desired in an auction because a fair and unique solution is required. The word fair is used in the sense that the auction solution should be equitable to every participant. In other words, the auction solution should not favor some participants but disfavor some other participants. The causes of multiple optima and how multiple optima can affect solution fairness and uniqueness are explained separately for primal and dual problems below.

4.3.1 Multi-optima for primal problems

The primal problem in the context of this work is the auction problem. Multiple primal optimal solutions result when the hyperplane of the objective function is parallel to one of the hyperplanes that bounds the feasible

region in the primal problem. Multiple primal optima can be observed when at least one of the reduced-cost coefficients (RCCs) of the optimal nonbasic variables is zero. However, a zero RCC value of at least one of the optimal nonbasic variables does not always mean that multiple primal optima will occur. Pivoting must be performed to ascertain whether the new primal optimal solution after pivoting is different from the primal optimal solution before pivoting. The primal simplex method is used for pivoting. Note that pivoting does not change the dual optimal solution because the pivoting is always on the nonbasic variable that has a zero RCC.

In an auction, multiple primal optima indicate that the optimal assignment between sellers and buyers is not unique. A variety of assignments can be specified to the accepted bid of each seller and each buyer and all assignments yield the same social surplus. This is strictly undesirable in auctions because if one of the optimal solutions is chosen, it is unfair to some other unchosen bidders who can provide the same social surplus if they are selected. Rules to select an optimum from the multiple auction optima, e.g., randomly selection are very difficult to construct to *preserve fairness* for every bidder.

4.3.2 Multi-optima for dual problems

Multiple dual optima generally occur when an excess number of hyperplanes pass through the optimal extreme point in the primal problem. Multiple dual optima can be observed when at least one of the basic variables of the primal problem is zero. However, a zero value of at least one of the optimal basic variables does not always mean that multiple dual optima will occur. Pivoting must be performed to ascertain whether the new optimal dual solution after pivoting is different from the optimal dual solution before pivoting. The dual simplex method is used for pivoting. Note that pivoting does not change the primal optimal solution because the pivoting is always on the basic variable that has zero value.

For auctions, multiple dual optima indicate that the set of shadow prices (dual prices) is not unique. A variety of assignments can be specified to the shadow prices and all assignments yield the same social surplus (objective function). This is strictly undesirable in auctions when the shadow prices are used for pricing. Recently, shadow prices have been proposed for use in pricing transmission congestion. If one set of the shadow prices is chosen to price transmission congestion, it will be advantageous to some of the bidders and disadvantageous to some other bidders. This is because one set of shadow prices can cause a bidder to pay higher transmission congestion fee than when other sets of shadow prices are used. Note that using shadow prices to price transmission services should not be accepted for implementation. The issue of shadow pricing has already been discussed in chapter 3.

4.4 Auctions as an assignment problem

An auction can be viewed as the assignment of products from sellers to buyers. This is why it is appropriate to treat an auction as an assignment problem. The term "assignment problem" used here is in the context of assigning products from sellers to buyers. The term "assignment problem" is different from that used in the context of the minimal cost network flow problem solution in most textbooks [Bazaraa, 1990, Hillier, 1995,

Thompson, 1992]. In the context of most textbooks, the assignment problem is a special class of the minimal cost network flow problem since the solution procedure is explained and not the type of application. As a solution procedure, the assignment problem has a particular structure for a special method to solve a unique topographic tableau. The minimal cost network flow problem is a special type of linear programming problem that has unique network structures that severely modify the application of the optimization rules. Such assignment problems are a special type of the transportation problem, which is a special type of the minimal cost network flow problem. The minimal cost network flow, the transportation, and the assignment problems are referred to in this section because they have similar problem structure to that of auction problems. The transportation problem and the assignment problem are separated from the minimal cost network flow problem according to their special structures so that special methods can be applied to solve the problems. The network simplex method has been applied to solve the minimal cost network flow problem and the transportation simplex method is applied to solve the transportation problem [Bazaraa, 1990, Hillier, 1995]. The Hungarian algorithm has been applied to solve the assignment problem [Bazaraa, 1990]. The network simplex method, the transportation simplex method, and the Hungarian algorithm are special versions of the simplex method. For this work, it is not appropriate to focus on these special methods to solve the auction problem. The general auction problem is formulated without regard to special equation structures and thus it can only be solved by general simplex method.

4.4.1 Assignment problems

Two major types of products are considered, heterogeneous products and homogeneous products. Homogeneous products are indistinguishable from each other while heterogeneous products can be distinguished by their characteristics such as quality. Quality can be defined as distinguishing properties of products. For example, high-quality coals have high heat capacity and low polluted gas emission. For electricity, the attributes used to distinguish it as heterogeneous products are availability, EES, power quality, cleanness (i.e., low polluted gas emission of the materials used to produce electricity), etc. Note that the word availability is used in the sense of certainties in receiving power of the buyers. The words availability and EES will be elaborated in chapter 5. An interesting example is price discrimination. One prevalent example of price discrimination in electricity is when a seller prices electricity corresponding to a guaranteed level of reliability in delivery [Chao, 1988]. For either type of products, players are not needed to be specified but can be specified if each seller/buyer has different perceived credit to the other buyer/seller.

Products can be traded as bilateral contracts or multilateral contracts through an exchange or traded by individuals. A bilateral contract is between a seller and a buyer while a multilateral contract is between a seller and several buyers or between a buyer and several sellers. A multilateral contract can be broken into multiple bilateral contracts. An exchange provides convenience and insurance. Trading through an exchange is more convenient for traders because the exchange gathers different types of contracts together, which means that traders do not waste time finding the contracts desired. The product of an exchange is a contract. In addition,

an exchange provides insurance to protect parties from sellers or buyers who default. For example, sellers who do not supply products according to the contracts will be fined through the exchange. Then, the exchange can distribute the money to participants, or use the fine to provide products from other sellers to the buyers for compensation. Regardless of whether products are traded through the exchange, the parties to the transactions remain identifiable.

Trading homogeneous products when players are specified is shown in Figure 4.1. Transaction, x_{ij}, is defined as from seller i to buyer j. Each buyer can have different price from each seller. Products from any seller should have the same unit value to any customer for homogeneous products. Trading homogeneous products through an exchange when players are not specified is shown in Figure 4.2. Transaction, x_{si} is from seller i, does not specify the buyers, and its price is the same for all buyers regardless of the actual buyer. Transaction x_{bj} is from buyer j, does not specify the sellers, and its price is the same regardless of sellers.

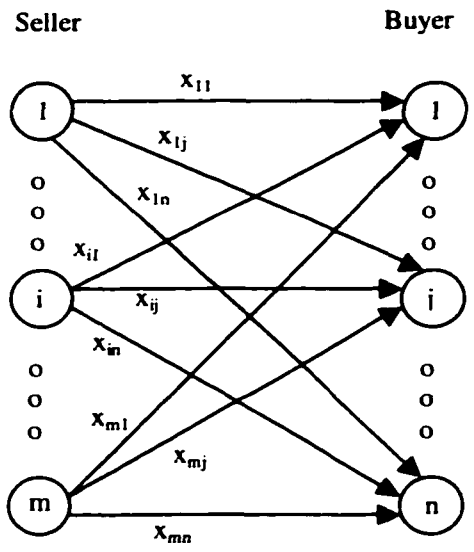

Figure 4.1 Trading homogeneous products when players are specified

Trading heterogeneous products through two contract types is shown in Figure 4.3. In Figure 4.3, there are two classes of the commodity, Exchange (Contract) a and Exchange (Contract) b, which are classified according to type of products. Contracts of a given commodity definition are called a class in this paper. Many classes of contracts can be added to Figure 4.3. Each class of contracts is provided for a group of homogeneous products. When the properties used to separate classes of exchanges are continuous quantities, they are usually discretized. For example, availability is measured in continuous quantities and it is then categorized (segmented) to separate classes of contracts. For example, six classes of contracts may be provided, which have availability as 0.7, 0.75, 0.80, 0.85, 0.90, 0.95. Three classes of contracts may be provided instead, which have

availability as 0.7, 0.8, and 0.9. The level of availability and the number of classes depend on the needs of the players to maintain optimal contract portfolios. Note that Figure 4.3 shows the case of player-non-specified (PNS). For the case of player-specified (PS), a transaction in any class is required to specify the associated seller and buyer.

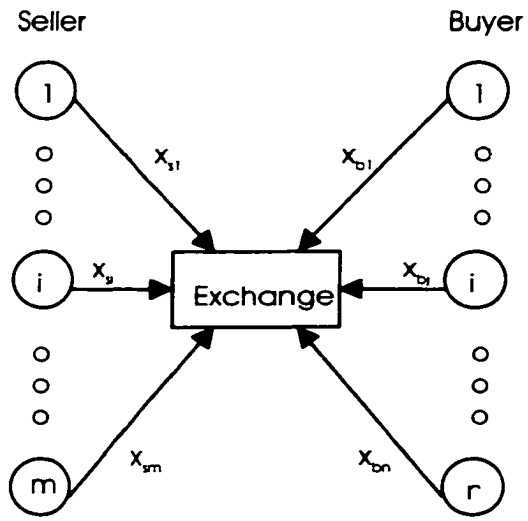

Figure 4.2 Trading homogeneous products through an exchange when players are not specified

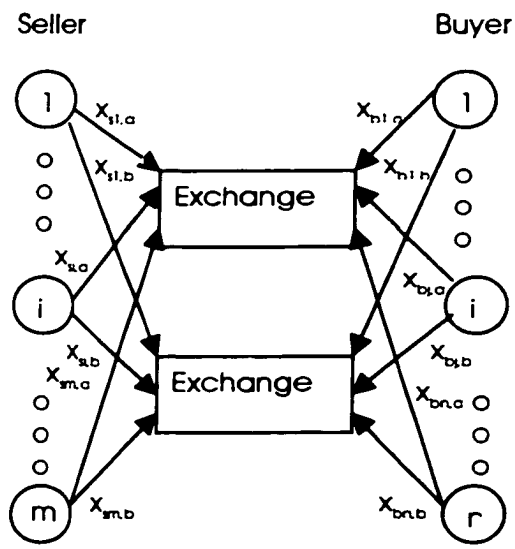

Figure 4.3 Trading heterogeneous products through two contract types

4.4.2 Formulation of assignment problems

This section formulates the assignment problems for heterogeneous and homogeneous products. Both primal and dual problems are shown. The dual problems are useful for the analysis in many aspects, especially that it shows the relationship between the dual prices and bid prices. The formulations find the partial equilibrium. The formulations are classified in different cases. One criterion used for classification is based on the parties who specify prices. This criterion breaks the assignment problems into three cases: (a) only sellers specify prices, (b) only buyers specify prices, and (c) both sellers and buyers specify prices. Since sellers and buyers only know their own prices, this is a sealed bid auction.

The effects of reservation prices are also considered. The reservation price of a seller is the lowest price at which the seller is willing to sell, and the reservation price of a buyer is the highest price at which the buyer is willing to buy. Reservation prices are considered when only sellers or buyers specify prices to ensure that parties who do not specify prices get the products at acceptable prices. Reservation prices are included by buyers when only sellers specify prices and reservation prices are included by sellers when only buyers specify prices. When both sellers and buyers specify prices, reservation prices are not needed because both parties can specify the prices according to their willingness to trade. Not only are the reservation prices considered to ensure that parties get products at acceptable prices, but they are also useful for avoiding degeneracy problem, which will be explained in next section. Formulations for all cases are classified below. Cases 1 to 5 belong to homogeneous products when players are specified. Cases 5 to 10 belong to homogeneous products when players are not specified. Case 11 is when heterogeneous products are traded through multiple classes of contract types and players are not specified. Because each class of contracts is provided for a group of homogeneous products, the formulation of case 11 can be easily modified to use with player-specified case by applying formulations of cases 1 to 5. The formulation of case 11 is shown when both sellers and buyers specify prices. The formulation can be easily modified to allow either sellers or buyers to specify prices and to allow reservation prices to be considered. The modification can be done by applying formulations of cases 1 to 10.

Presently in many electric power auctions, electric power is treated as a homogeneous product and electric power is auctioned in the exchange. The players are not specified in current auctions. The ICA performs bid matching. In assignment problems, cases where only sellers specify prices are similar to single-sided auctions in which only GENCOs submit the bids. Cases where both sellers and buyers specify prices are similar to double-sided auctions in which both GENCOs and ESCOs submit the bids. The formulations of assignment problems can be applied to electric power auctions, which would require some modifications. All the formulations shown below can be applied to electric power auctions when different auction frameworks are needed. The complete formulation for each auction structure can be acquired by adding additional constraints to the formulations. Examples of additional constraints are power flow constraints and transmission line flow limits.

In the present case that electric power is treated as a homogeneous product and players are not specified, formulations in cases 6 to 10 can be applied to when electric power is traded via either bilateral or multilateral

contracts. Cases 6 and 7 are one-sided in which prices are specified by sellers and cases 8 and 9 are one-sided in which prices are specified by buyers. Case 10 is double-sided. If electric power is considered a heterogeneous product, if traded by double-sided auctions, and if players are not specified, then the formulation in case 11 can be applied with some modifications. If other auction structures are needed, this formulation can be modified as explained above. Note that this work considers electricity as heterogeneous products in the case when electric power has different availability and EES levels. This work does not consider other cases of heterogeneous electric power because of complexity in transmission. The auction formulations of 11 cases can be summarized and differentiated according to the criteria mentioned in Table 4.1.

Table 4.1 Summary of all cases

	Products	PS or PNS	Price by	Reservation Price?
1	Homogeneous	PS	Sellers	Without
2	Homogeneous	PS	Sellers	With
3	Homogeneous	PS	Buyers	Without
4	Homogeneous	PS	Buyers	With
5	Homogeneous	PS	Both	Without
6	Homogeneous	PNS	Sellers	Without
7	Homogeneous	PNS	Sellers	With
8	Homogeneous	PNS	Buyers	Without
9	Homogeneous	PNS	Buyers	With
10	Homogeneous	PNS	Both	Without
11	Heterogeneous	PNS	Both	Without

The notation of symbols used in the formulation is:

c_{sij} price specified by seller i to buyer j for homogeneous products in PS case

c_{bij} price specified by buyer j to seller i for homogeneous products in PS case

c_{si} price specified by seller i for PNS case

c_{bj} price specified by buyer j for PNS case

$c_{si,h}$ price specified by seller i for a heterogeneous product sold in class h

$c_{bj,h}$ price specified by buyer j for a heterogeneous product bought in class h

π_{si} reservation price specified by seller i

π_{bj} reservation price specified by buyer j

x_{ij} amount of a homogeneous product sold from seller i to buyer j in PS case

x_{si}	amount of a homogeneous product sold by seller i in PNS case
x_{bj}	amount of a homogeneous product bought from buyer j in PNS case
$x_{si,h}$	amount of a heterogeneous product sold by seller i in class h
$x_{bj,h}$	amount of a heterogeneous product bought from buyer j in class h
y_{si}	amount sold back of seller i
y_{bj}	amount bought back of buyer j
S_i	supply capacity of seller i
D_j	potential demand of buyer j
u_i	dual variable associated with supply constraint of seller i
v_j	dual variable associated with demand constraint of buyer j
w	dual variable associated with the constraint balancing supply and demand in case 10
w_h	dual variable associated with the constraint balancing supply and demand of a heterogeneous product traded in class h
m	number of sellers
n	number of buyers
l	number of contract types (classes)

Case 1: Homogeneous products, PS case, prices specified by sellers, without reservation prices

Primal problem

$$\min_{x_{ij}} \sum_{i=1}^{m} \sum_{j=1}^{n} c_{sij} x_{ij}$$

s.t.

$$\sum_{j=1}^{n} x_{ij} \le S_i \qquad i=1,2,3,\ldots,m$$

$$\sum_{i=1}^{m} x_{ij} \ge D_j \qquad j=1,2,3,\ldots,n$$

$$x_{ij} \ge 0 \qquad i=1,2,3,\ldots,m \qquad j=1,2,3,\ldots,n$$

Dual problem

$$\max_{u_i, v_j} \sum_{i=1}^{m} S_i u_i + \sum_{j=1}^{n} D_j v_j$$

s.t.

$$u_i + v_j \le c_{sij} \qquad i=1,2,3,\ldots,m \qquad j=1,2,3,\ldots,n$$

$$u_i \le 0 \quad v_j \ge 0 \qquad i=1,2,3,\ldots,m \qquad j=1,2,3,\ldots,n$$

Case 2: Homogeneous products, PS case, prices specified by sellers, with reservation prices

Primal problem

$$\min_{x_{ij}, y_{bj}} \sum_{i=1}^{m} \sum_{j=1}^{n} c_{sij} x_{ij} + \sum_{j=1}^{n} \pi_{bj} y_{bj}$$

s.t.

$$\sum_{j=1}^{n} x_{ij} \le S_i \qquad i=1,2,3,\ldots,m$$

$$\sum_{i=1}^{m} x_{ij} + y_{bj} \ge D_j \qquad j=1,2,3,\ldots,n$$

$$x_{ij} \ge 0 \quad y_{bj} \ge 0 \qquad i=1,2,3,\ldots,m \qquad j=1,2,3,\ldots,n$$

Dual problem

$$\max_{u_i, v_j} \sum_{i=1}^{m} S_i u_i + \sum_{j=1}^{n} D_j v_j$$

s.t.

$$u_i + v_j \le c_{sij} \qquad i=1,2,3,\ldots,m \qquad j=1,2,3,\ldots,n$$

$$v_j \le \pi_{bj} \qquad j=1,2,3,\ldots,n$$

$$u_i \le 0 \quad v_j \ge 0 \qquad i=1,2,3,\ldots,m \qquad j=1,2,3,\ldots,n$$

Case 3: Homogeneous products, PS case, prices specified by buyers, without reservation prices

Primal problem

$$\max_{x_{ij}} \sum_{i=1}^{m} \sum_{j=1}^{n} c_{bij} x_{ij}$$

s.t.

$$\sum_{j=1}^{n} x_{ij} \le S_i \qquad i=1,2,3,\ldots,m$$

$$\sum_{i=1}^{m} x_{ij} \le D_j \qquad j=1,2,3,\ldots,n$$

$$x_{ij} \ge 0 \qquad i=1,2,3,\ldots,m \qquad j=1,2,3,\ldots,n$$

Dual problem

$$\min_{u_i, v_j} \sum_{i=1}^{m} S_i u_i + \sum_{j=1}^{n} D_j v_j$$

s.t.

$$u_i + v_j \geq c_{bij} \qquad i=1,2,3,\ldots,m \qquad j=1,2,3,\ldots,n$$

$$u_i \geq 0 \quad v_j \geq 0 \qquad i=1,2,3,\ldots,m \qquad j=1,2,3,\ldots,n$$

Case 4: Homogeneous products, PS case. prices specified by buyers, with reservation prices

Primal problem

$$\max_{x_{ij}, y_{si}} \sum_{i=1}^{m} \sum_{j=1}^{n} c_{bij} x_{ij} + \sum_{i=1}^{m} \pi_{si} y_{si}$$

s.t.

$$\sum_{j=1}^{n} x_{ij} + y_{si} \leq S_i \qquad i=1,2,3,\ldots,m$$

$$\sum_{i=1}^{m} x_{ij} \leq D_j \qquad j=1,2,3,\ldots,n$$

$$x_{ij} \geq 0 \quad y_{si} \geq 0 \qquad i=1,2,3,\ldots,m \qquad j=1,2,3,\ldots,n$$

Dual problem

$$\min_{u_i, v_j} \sum_{i=1}^{m} S_i u_i + \sum_{j=1}^{n} D_j v_j$$

s.t.

$$u_i + v_j \geq c_{bij} \qquad i=1,2,3,\ldots,m \qquad j=1,2,3,\ldots,n$$

$$u_i \geq \pi_{si} \qquad i=1,2,3,\ldots,m$$

$$u_i \geq 0, \quad v_j \geq 0 \qquad i=1,2,3,\ldots,m \qquad j=1,2,3,\ldots,n$$

Case 5: Homogeneous products, PS case, prices specified by sellers and buyers, without reservation prices

Primal problem

$$\max_{x_{ij}} \sum_{i=1}^{m} \sum_{j=1}^{n} (c_{bij} - c_{sij}) x_{ij}$$

s.t.

$$\sum_{j=1}^{n} x_{ij} \le S_i \qquad i=1,2,3,\ldots,m$$

$$\sum_{i=1}^{m} x_{ij} \le D_j \qquad j=1,2,3,\ldots,n$$

$$x_{ij} \ge 0 \qquad i=1,2,3,\ldots,m \qquad j=1,2,3,\ldots,n$$

Dual problem

$$\min_{u_i, v_j} \sum_{i=1}^{m} S_i u_i + \sum_{j=1}^{n} D_j v_j$$

s.t.

$$u_i + v_j \ge c_{bij} - c_{sij} \qquad i=1,2,3,\ldots,m \qquad j=1,2,3,\ldots,n$$

$$u_i \ge 0 \quad v_j \ge 0 \qquad i=1,2,3,\ldots,m \qquad j=1,2,3,\ldots,n$$

Case 6: Homogeneous products, PNS case, prices specified by sellers, without reservation prices

Primal problem

$$\min_{x_{si}} \sum_{i=1}^{m} c_{si} x_{si}$$

s.t.

$$x_{si} \le S_i \qquad i=1,2,3,\ldots,m$$

$$\sum_{i=1}^{m} x_{si} \ge \sum_{j=1}^{n} D_j$$

$$x_{si} \ge 0 \qquad i=1,2,3,\ldots,m$$

Dual problem

$$\max_{u_i, v} \sum_{i=1}^{m} S_i u_i + \left(\sum_{j=1}^{n} D_j \right) v$$

s.t.

$$u_i + v \le c_{si} \qquad i=1,2,3,\ldots,m$$

$$u_i \le 0 \quad v \ge 0 \qquad i=1,2,3,\ldots,m$$

Case 7: Homogeneous products, PNS case, prices specified by sellers, with a reservation price

Primal problem

$$\min_{x_{si}, y_b} \sum_{i=1}^{m} c_{si} x_{si} + \pi_b y_b$$

s.t.

$$x_{si} \le S_i \qquad i=1,2,3,\ldots,m$$

$$\sum_{i=1}^{m} x_{si} + y_b \ge \sum_{j=1}^{n} D_j$$

$$x_{si} \ge 0 \quad y_b \ge 0 \qquad i=1,2,3,\ldots,m$$

Dual problem

$$\max_{u_i, v} \sum_{i=1}^{m} S_i u_i + \left(\sum_{j=1}^{n} D_j \right) v$$

s.t.

$$u_i + v \le c_{si} \qquad i=1,2,3,\ldots,m$$

$$v \le \pi_b$$

$$u_i \le 0 \quad v \ge 0 \qquad i=1,2,3,\ldots,m$$

Case 8: Homogeneous products, PNS case, prices specified by buyers, without reservation prices

Primal problem

$$\max_{x_{bj}} \sum_{j=1}^{n} c_{bj} x_{bj}$$

s.t.

$$x_{bj} \le D_j \qquad j=1,2,3,\ldots,n$$

$$\sum_{j=1}^{n} x_{bj} \le \sum_{i=1}^{m} S_i$$

$$x_{bj} \ge 0 \qquad j=1,2,3,\ldots,n$$

Dual problem

$$\min_{u, v_j} \sum_{j=1}^{n} D_j v_j + \left(\sum_{i=1}^{m} S_i \right) u$$

s.t.

$$u + v_j \geq c_{bj} \qquad j=1,2,3,\ldots,n$$

$$u \geq 0 \quad v_j \geq 0 \qquad j=1,2,3,\ldots,n$$

Case 9: Homogeneous products, PNS case, prices specified by buyers, with a reservation price

Primal problem

$$\max_{x_{bj}, y_s} \sum_{j=1}^{n} c_{bj} x_{bj} + \pi_s y_s$$

s.t.

$$x_{bj} \leq D_j \qquad j=1,2,3,\ldots,n$$

$$\sum_{j=1}^{n} x_{bj} + y_s \leq \sum_{i=1}^{m} S_i$$

$$x_{bj} \geq 0 \quad y_s \geq 0 \qquad j=1,2,3,\ldots,n$$

Dual problem

$$\min_{u, v_j} \sum_{j=1}^{n} D_j v_j + \left(\sum_{i=1}^{m} S_i \right) u$$

s.t.

$$u + v_j \geq c_{bj} \qquad j=1,2,3,\ldots,n$$

$$u \geq \pi_s$$

$$u \geq 0 \quad v_j \geq 0 \qquad j=1,2,3,\ldots,n$$

Case 10: Homogeneous products, PNS case, prices specified by sellers and buyers, without reservation prices

Primal problem

$$\max_{x_{si}, x_{bj}} \sum_{j=1}^{n} c_{bj} x_{bj} - \sum_{i=1}^{m} c_{si} x_{si}$$

s.t.

$$x_{si} \leq S_i \qquad i=1,2,3,\ldots,m$$

$$x_{bj} \leq D_j \qquad j=1,2,3,\ldots,n$$

$$\sum_{i=1}^{m} x_{si} - \sum_{j=1}^{n} x_{bj} = 0$$

$$x_{si} \geq 0 \quad x_{bj} \geq 0 \qquad \text{i=1,2,3,...,m} \qquad \text{j=1,2,3,...,n}$$

Dual problem

$$\min_{u_i, v_j, w} \sum_{i=1}^{m} S_i u_i + \sum_{j=1}^{n} D_j v_j$$

s.t.

$$-u_i - w \leq c_{si} \qquad \text{i=1,2,3,...,m}$$

$$v_j - w \geq c_{bj} \qquad \text{j=1,2,3,...,n}$$

$$u_i \geq 0 \quad v_j \geq 0 \quad \text{w free} \qquad \text{i=1,2,3,...,m} \qquad \text{j=1,2,3,...,n}$$

Case 11: Heterogeneous products, PNS case, via the exchange, prices specified by sellers and buyers, without reservation prices

Primal problem

$$\max_{x_{si,h}, x_{bj,h}} \sum_{h=1}^{l} \left[\sum_{j=1}^{n} c_{bj,h} x_{bj,h} - \sum_{i=1}^{m} c_{si,h} x_{si,h} \right]$$

s.t.

$$\sum_{i=1}^{m} x_{si,h} - \sum_{j=1}^{n} x_{bj,h} = 0 \qquad \text{h=1,2,3,...,l}$$

$$\sum_{h=1}^{l} x_{si,h} \leq S_i \qquad \text{i=1,2,3,...,m}$$

$$\sum_{h=1}^{l} x_{bj,h} \leq D_j \qquad \text{j=1,2,3,...,n}$$

$$x_{si,h} \geq 0 \quad x_{bj,h} \geq 0 \qquad \text{i=1,2,3,...,m} \qquad \text{j=1,2,3,...,n} \qquad \text{h=1,2,3,...,l}$$

Dual problem

$$\min_{u_i, v_j, w_h} \sum_{i=1}^{m} S_i u_i + \sum_{j=1}^{n} D_j v_j$$

s.t.

$$-u_i - w_h \leq c_{si,h} \qquad \text{i=1,2,3,...,m} \qquad \text{h=1,2,3,...,l}$$

$v_j - w_h \geq c_{bj,h}$ j=1,2,3,...,n h=1,2,3,...,l

$u_i \geq 0 \quad v_j \geq 0 \quad w_h$ free i=1,2,3,...,m j=1,2,3,...,n h=1,2,3,...,l

4.4.3 Degeneracy in assignment problems

In the primal problems of all cases shown above, degeneracy can occur at the optimum, which in turn causes multiple dual optima. Degeneracy in some cases of formulations have been discussed in [Thompson, 1992, Bazaraa, 1990, Hillier, 1995]. This works extends the discussions in both primal and dual aspects and more cases of formulations.

The degeneracy problem in this context results from redundant constraints. There are three major sets of constraints: supply constraints, demand constraints, and non-negativity constraints. Supply and demand constraints are redundant when some conditions are met. The explanations are divided into two parts, one that does not consider reservation prices and one that does consider reservation prices. Cases 1, 3, 5, 6, 8, 10, and 11 do not include reservation prices and cases 2, 4, 7, and 9 do include reservation prices.

First, consider the cases without reservation prices. In cases 3 and 5, summing the supply constraints together yields (4.1) and summing the demand constraints together yields (4.2). Equations (4.2) and (4.2) are the same if the total supply capacity is equal to the total potential demand, (4.3). This illustrates that redundant constraints occur when the total capacity and the total potential demand are the same. The total supply capacity is not always equal to the total potential demand. It is important to point out that the total supply is always equal to the total demand at the equilibrium to have market cleared; however, the total supply capacity is not necessary equal to the total potential demand. Explaining this in the context of auctions, the total bid amount of sellers is not necessarily equal to that of buyers but the total amount sold by sellers is always equal to the total amount bought by buyers (assuming lossless cases). Because the objective function is a maximization one, if the total supply capacity is equal to the total potential demand, both sets of supply and demand constraints are binding at optimality. Otherwise, the set of constraints with the smaller total is binding at optimality.

$$\sum_{i=1}^{m} \sum_{j=1}^{n} x_{ij} \leq \sum_{i=1}^{m} S_i \tag{4.1}$$

$$\sum_{i=1}^{m} \sum_{j=1}^{n} x_{ij} \leq \sum_{j=1}^{n} D_j \tag{4.2}$$

$$\sum_{i=1}^{m} S_i = \sum_{j=1}^{n} D_j \tag{4.3}$$

$$u_i' = u_i - k; \quad v_j' = v_j + k; \quad k \in R, k \neq 0 \tag{4.4}$$

$$\sum_{i=1}^{m} S_i u_i' + \sum_{j=1}^{n} D_j v_j' = \sum_{i=1}^{m} S_i(u_i - k) + \sum_{j=1}^{n} D_j(v_j + k)$$
$$= \sum_{i=1}^{m} S_i u_i + \sum_{j=1}^{n} D_j v_j - k\sum_{i=1}^{m} S_i + k\sum_{j=1}^{n} D_j \tag{4.5}$$

If condition (4.3) is satisfied, cases 1, 6, 8, 10, and 11 are also primal degenerate at the optimal solution. Although in cases 1 and 6, demands are in the forms of greater or equal constraints, they are binding if condition (4.3) is satisfied. There is only one demand constraint in case 6 and one supply constraint in case 8; however, this does not affect the application of condition (4.3). There is one additional constraint in cases 10 and 11. This constraint is to assure that the total supply is equal to the total demand; thus, it does not affect the application of condition (4.3).

This illustrates degeneracy of optimal primal solution by expiaining in the context of the primal problem. The application can also be applied to the dual problem. It can be concluded that multiple dual optima occur when condition (4.3) is satisfied. In general, it is difficult to know all the dual optima from the degenerate primal unless pivoting is performed. Because the structure of dual problems in all cases is unique, the pattern of all the dual optimal solutions can be determined. Investigation of the dual problems in all cases without reservation prices show that the objective functions are the same. The constraints (not including constraints of dual variable signs) are all in the form that the left-hand-side is u_i+v_j, and the right-hand-side is the price. The constraints can be in either of the two standard forms: less than or equal to, or greater than or equal to. In cases 10 and 11, there are two set of constraints and u_i or v_j are separated in each set of constraints. However, two sets of constraints can be summed and result in the specific form as mentioned. From this investigation, it can be inferred that the value of every u_i can be reduced by a same constant and that the value of v_j can be increased by the same constant (4.4). The constant (k) can be any positive or negative number for which the dual variable signs are not violated. This ensures value of u_i+v_j does not change and so this does not affect the constraint. For the objective function, equation (4.5) shows that the dual objective function does not change after shifting dual variables according to (4.4), as long as condition (4.3) is satisfied.

Next, the cases with reservation prices (cases 2, 4, 7, and 9) are detailed. The reservation prices appear as limits for either u_i or v_j in dual problems. If any of the limit constraints is not binding, multiple dual optima can occur if condition (4.3) is satisfied. This is because if any of the limit constraints is not binding, values of the dual variables can still be shifted as long as they satisfy the limit constraints. In terms of the primal problem, if any of the limit constraints is not binding, the variables representing sold back or bought back values (y_{bj}, y_{si}, y_b, and y_s) are zero, according to complementary slackness. This will make the structure of the primal problem the same as the cases without reservation prices. On the other hand, if any of the limit constraints is binding, it will determine a unique value of the associated dual variable and in turn determine the values of all other dual variables. In addition, the binding limit constraint does not require the variables representing sold back or

bought back values (y_{bj}, y_{si}, y_b, and y_s) to be zeros. This proves that the binding limit constraint prevents multiple optimal dual solutions even that condition (4.3) is satisfied. The limit constraint is binding when either any specified price by the buyer to the seller is less than the reservation price of the associated seller or any specified price by the seller to the buyer is greater than the reservation price of the associated buyer.

In summary, degeneracy in primal optimal solution occurs when the total supply capacity is equal to the total potential demand (4.3). This also causes multiple dual optima. Fortunately, the total supply capacity is not always equal to the total potential demand. Although the total supply is always equal to the demand (in lossless cases), but the total supply capacity and the total potential demand are not always equal to each other. Multiple solutions are not desired in auctions as explained in previous section. The interesting question is how to handle the problem of multiple dual optimal solutions when (4.3) is satisfied. It is not possible to eliminate just one of either the supply or demand constraints because the choice of elimination is equivalent to specifying the shifted constant. This would be unfair to the bidders. One possible solution is the ICA can ask the bidders to resubmit the bids if the ICA discovers that the total supply capacity is equal to the total potential demand, which can be easily detected.

4.5 Chapter conclusions

Formulations of various auction structures are presented in this work. The formulations are classified according to four criteria. First, electric power is treated either as heterogeneous products or as homogeneous products. Second, players may or may not be specified. Third, electric power prices are specified by sellers or buyers in a one-sided auction, or both in a double-sided auction. Fourth, reservation prices may or may not be included in trading. Products can be traded as bilateral contracts or multilateral contracts through an exchange or traded by individuals. The basic formulations are shown in this work and the complete formulation for each auction structure can be acquired by adding additional constraints to the formulations. Examples of additional constraints are power flow constraints and transmission line flow limits. Multiple dual optima can be checked easily by the condition that the total supply capacity is equal to the total potential demand. The condition is applicable to all the cases of formulations.

Presently electric power is traded as a homogeneous product. The formulations developed are applicable to auctions that consider electric power as heterogeneous products, which gives more flexibility and options to the traders. This is especially true if the buyer is to be given the ability to use availability and EES as additional price signals to identify the economic elasticity of such products. This is true for all possible differentiations of the commodity on which the customer may prefer to bid. In addition, the formulations developed are applicable to other auction structures as needed for different regions of the world.

5 AUCTIONS INCLUDING AVAILABILITY AND EXPECTED ENERGY SERVED

5.1 Chapter overview

Electricity prices have been discriminated according to the delivered certainty in the past when the electric power industry was regulated. This feature should be attainable in the new marketplace. In chapter 4, several formulations are developed for auctions when different structures are needed. One of the important structures considered is electricity as heterogeneous products. This chapter elaborates the concept by differentiating electricity in multiple availability levels. Each availability level also has different expected energy served (EES) specified. Two types of bids are allowed for the players in this chapter, power bids and contingency bids. Contingency bids are used as remedial actions in case of contingencies. Accepted contingency bids have to be sufficient to assure the specified availability and EES levels. This chapter presents a proposed auction structure and its mechanism to be used for electric power auctions when different availability and EES levels are procurable. The additional auction features, the availability level and EES, provide more choices to the bidders in the market.

5.2 Introduction

In the past, when the electric power industry was regulated, the integration of power system's economy and security was known as security constrained dispatch (SCD) problems. Under normal conditions, operational constraints such as line and voltage limits are incurred as preventive controls in the SCD problem. Under contingencies, remedial actions (corrective controls) are selected by the operator to alleviate and bring the system back into normal conditions. Remedial actions could be automatic response to contingencies, precontingency (invoked by the operator in expectation of a contingency), or post contingency (invoked by the operator after the occurrence of a contingency). If the situation is not too complex, the operator could apply the remedial actions according to their experience. If the situation is complex, the operator should use some reliability assessment software to calculate the optimal remedial actions. Some examples of the software used as basis for this work includes TPLAN and TRELSS. TPLAN is illustrated in [Power Technologies, 1999]. TRELSS is illustrated in [Bhavaraju, 1992, Beshir, 1996].

One characteristic of any good market is that power systems are operated reliably, i.e., adequately and securely. The phrase "ancillary services" emerged in the deregulated market for supportive aspects of power delivery. Ancillary services can be categorized into support for system reliability and support for power transfer between sellers and buyers. Spinning reserve and supplemental reserve are two such ancillary services used for additional capacity when contingencies occur. In this work, spinning reserve and supplemental reserve are

considered as remedial actions for the deregulated electricity market. In addition, this work also outlines other remedial actions.

Remedial actions are needed so that power can be delivered from sellers to buyers promptly according to the contracts. Users can lose great amounts of money if electricity is cut off. This is one of the reasons why electricity should have various availability and EES levels, so buyers can select the desired availability and EES levels of bought power. In brief, availability is defined in this work as the probability of the services being served to/by the particular participants for the period specified in the auction contracts. EES is defined in this work as the expected proportion of the delivered power amount to the bought power amount of a buyer in the auction period. More detail will be explained in other section.

Since remedial actions are very important for the power market, there should be market mechanisms for the remedial actions so that there are enough remedial actions to be supplied to the system whenever they are needed. A market for remedial actions is complex to construct. One major reason is the complexity of interdependency between the remedial action market and power market. This chapter describes a market mechanism of using contingency bids, which are defined as bids for supplying remedial actions, for the remedial action market.

As mentioned in chapter 4, electricity can be traded as heterogeneous products. This chapter elaborates the concept by differentiating electricity in multiple availability and EES levels. Multi-level availability (and EES) market is used for trading power and remedial action. This chapter also illustrates the procedure that the ICA uses for matching power bids and contingency bids. The market illustrated in this chapter provides additional price signals (availability and EES) to the traders and also provides a market mechanism for remedial actions.

By having availability and EES as additional price signals from bid price, traders have additional options to choose and this in turn gives more flexibility for trading. This also gives flexibility for buyers to choose electricity at a desired level of availability and EES. The buyers who need high continuity of electricity, e.g. hospitals probably select to bid in the class of high availability (which also has high EES).

There are several probabilistic indices that have been used in the literature for security assessment. Loss of load probability (LOLP) and expected energy not served (EENS) (or expected demand not served) are presented in [Sullivan, 1977, Wang, 1994]. In [McCalley, 1999b], risk index is used for security assessment. The indices use in this work for distinguishing each auction class from each other are availability and EES. These two indices are calculated based on LOLP and expected demand not served described in [Sullivan, 1977].

The remaining of this chapter is organized as follows. Section 5.3 outlines related literature. Section 5.4 describes a market mechanism for trading power and remedial actions in multi-level availability auctions and the associated assumptions. Section 5.5 describes a procedure that the ICA can use to match the bids of power and remedial actions. Note that the market mechanism and the bid matching procedure proposed in this work is for spot market, but could be applied to multi-period market with modification. Section 5.6 presents results implemented with a four-bus system. Section 5.7 concludes this chapter. Note that GENCOs are assumed to be sellers and ESCOs are assumed to be buyers in these sections.

5.3 Review of related work

Hirst et al. discussed how markets for ancillary services could be defined and operated [Hirst, 1998]. The model proposed by Hirst et al. assumed that each generator bids on its actual cost and only generators provide ancillary services. The model ignored uncertainty of generator outages and customer loads but the comment was made that incorporating such factors would increase the ancillary service costs. The market structure used was based on California's market in which each market of ancillary services is treated individually and sequentially. The market structure used also assumed that the system operator guaranteed a certain earning amount to each generator for providing an ancillary service. The system operator could redispatch the generators but could not reduce their earnings. This paper found that the market of each ancillary service is highly interdependent to markets of other ancillary services.

Strbac et al. incorporated load-management services and generation redispatch services for post-contingency remedial actions to the optimal security constrained economic dispatch problem [Strbac, 1996]. The market structure used was based on United Kingdom's market. The purpose was to control the uplift cost by applying load reduction optimally. Uplift cost results from the out of merit redispatch of generating units to meet security criteria. The concept is the optimization of the cost incurred from load reduction and the benefit from uplift cost reduction. A Bender based decomposition scheme was used to solve the problem.

Kaye et al. proposed to use the approach of inducement and cooperation for maintaining system security [Kaye, 1995]. The approach used was that the central coordinator specified prices to sellers and buyers for contingency offering. Then the sellers and buyers specified the contingency offering amounts based on the prices from the central coordinator. If the central coordinator received insufficient contingency offering amounts, the central coordinator calculated the new prices and proposed the new prices to the desired bidders. It has been shown in the same paper that a contingency offering price could be set so that the contingency offering amount supplied by each player was socially optimal.

Momoh et al. presented a scheme for reliability assessment of power system operations [Momoh, 1994]. The purpose was to select the optimal remedial actions for each contingency. The proposed scheme employed TRELSS program to calculate the expected unserved energy (EUE) with respect to each remedial action for the selected contingencies. The scheme then calculated the associated cost of each remedial action that has been applied to each contingency. The operator selected the optimal remedial action for each contingency by compromising between the total remedial action cost and the EUE.

Meliopoulos et al. innovated several major improvements to the reliability assessment program RECS [Meliopoulos, 1988]. The innovations were aimed to improve the efficiency of the computational procedure. The method employed for the remedial action selection was iterative and the constraints were linearlized. The method utilizes LP to solve for the solutions. If discrete variables such as capacitor switching were included, the mixed-integer LP approach was utilized.

5.4 Market mechanism

This section explains a market mechanism for trading power and remedial actions in multi-level availability and EES auctions. In an auction class, the availability and EES levels are specified. Specific terms and assumptions used in this chapter are also explained.

5.4.1 Availability

The availability level used in this work is defined as the probability of the services being served to/by the particular participants for the period specified in the auction contracts. The availability level of the bought power of an ESCO is the probability that the bought power will be served. The availability level of the sold power of a GENCO is the probability that the sold power will be supplied. The availability level of the transmission component of a TRANSCO is the probability that the transmission component will be in service. Note that the availability is considered for the whole period specified in the auction contract. In other words, the services of particular participants are considered available if the services are available for the whole period. Otherwise, the services are considered unavailable.

In each auction class, there are two quantities specified: availability and EES. EES will be explained in the next section. The availability level specified in each auction class is subject to the ESCOs, which are assumed to buy the power. In each class, the availability level specified indicates the minimum availability guaranteed to the ESCOs that buy power from that auction class.

In the process of matching bids, the loss of load probability (LOLP) is calculated for each auction class and the availability level is calculated as one minus the LOLP. If the calculated availability level is less than the value specified, the ICA needs to announce the calculated availability level so that the ESCOs could plan to get additional power from other sources when contingency occurs, e.g., bilateral contracts with other GENCOs. Depending upon the rules, the ICA might need to pay charges to ESCOs that buy power from the auction classes that have lower availability levels than what are specified. The ICA could keep track of the power received by the ESCOs in a specified period, which could be weekly, monthly, quarterly, semi-annually, or yearly, and then justify the charges according to the average availability of the power the ESCOs receive.

The LOLP used in this work is defined as the probability that the bought power of (at least) an ESCO is not fully served (i.e., curtailed). Power curtailing is invoked only when not any remedial actions can be applied to bring the system back in normal conditions in case of contingencies. The formula for calculating LOLP is shown in (5.1), based on [Sullivan, 1977]. The LOLP of class h is denoted as $LOLP^{h}$. The probability of contingency k is denoted by $prob^{k}$. Only the probabilities of contingencies that cause curtailing in the bought power of ESCO(s) in class h are summed to be the $LOLP^{h}$ in (5.1). Thus, the LOLP in each class can be calculated from the summation of the probabilities of contingencies that cause curtailing of the bought power of ESCO(s) in class h. The method used for calculating the LOLP is probabilistic and based on contingency enumeration. The calculation is aimed for operation and steady-state scenarios.

$$LOLP^h = \sum prob^k,\ k \text{ is the contingency that causes load curtailments} \quad (5.1)$$

There are a tremendous number of contingencies. Considering all of them will result in too much computational time without necessity. Past result investigation should help the ICA to justify which contingencies to be considered. In addition, the ICA could consider only single outages and simultaneous outages of at most two components, depending on the ICA's justification. Contingency selections are not in the scope of this work but are well illustrated in [Sullivan, 1977, Wang, 1994].

Figure 5.1 describes an example in which five contingencies are considered. Only a very small number of contingencies are considered for the ease of explanation. Contingency is abbreviated as cont. in the figure. The probability of each contingency is shown as numbers inside the parentheses. Assume that contingencies 1, 2, and 5 cause power curtailing in class 1; thus, the LOLP of class 1 ($LOLP^1$) is equal to the summation of 0.01, 0.02, and 0.03, which is 0.06. The availability of class 1 is 1–0.06, which is 0.94. In class 2, assume that contingencies 1, 3, and 4 cause power curtailing; thus, the LOLP of class 2 ($LOLP^2$) is equal to the summation of 0.01, 0.01, and 0.02, which is 0.04. The availability of class 2 is 1–0.04, which is 0.96. The calculated availability levels in classes 1 and 2 must not lower than the availability levels specified in classes 1 and 2; otherwise, the charges could be paid by the ICA to ESCOs who bought power from the class with unsatisfied availability.

cont.1 (0.01)	cont. 2 (0.02)	cont. 3 (0.01)	cont. 4 (0.02)	cont. 5 (0.03)

Figure 5.1 An example of the considered contingencies for the LOLP calculation

5.4.2 EES

In each auction class, an EES is specified in addition to the availability. The EES specified in each auction class is subject to the ESCOs, which are assumed to buy the power. In each class, the EES level specified indicates the minimum EES guaranteed to all the ESCOs that buy power from that auction class. There are generally more than one ESCO that buys power (i.e., get their bids accepted) in each class. Each ESCO generally has different calculated EES from each other. The calculated EES of all ESCOs in an auction class must be not lower than the EES specified in the auction class. Otherwise, the ICA might need to pay charges to the ESCOs that have lower EES than the level specified, depending on the rules. Similar to the availability, the ICA could keep track of the power received by the ESCOs in a specified period, which could be weekly,

monthly, quarterly, semi-annually, or yearly, and then justify the charges according to the average EES of the power the ESCOs receive.

The EES used in this work is defined as the expected *proportion* of the delivered power amount to the bought power amount of an ESCO in the auction period. EES is calculated from one minus EENS. The EENS used in this work is defined as the expected *proportion* of the non-delivered (i.e., curtailed) power amount to the bought power amount of an ESCO in the auction period. The formula used for calculating the EENS is shown in (5.2), based on [Sullivan, 1977]. The EENS at bus b of class h is denoted by $EENS_b^h$. The probability that each contingency k will occur is denoted by $prob^k$. The ratio of curtailed load to the accepted power bid amount of the ESCO at bus b for class h corresponding to contingency k is denoted as $LC_b^{h,k}$. There are totally s contingencies considered. The method used for calculating the LOLP is probabilistic and based on contingency enumeration. The calculation is aimed for operation and steady-state scenarios.

$$EENS_b^h = \sum_{k=1}^{s} prob^k LC_b^{h,k} \tag{5.2}$$

Power is used instead of energy in the definition because this work assumes that the energy is served only if the energy is served for the whole period. Otherwise, the energy is considered non-served. The definition of EENS used is slightly different from what have been used in the literature that EENS is defined as the proportion of the non-delivered amount to the accepted amount, not the non-delivered amount. This is because the accepted amount of each ESCO is not known ahead of time and the accepted amount of each ESCO is generally not equal to each other. For example, the accepted bid amount of ESCOs 1 and 2 in an auction class are 1 MW and 10 MW, respectively. If the EENS is defined as the proportion, e.g., 0.1 (10%) for the auction class, the maximum expected non-delivered power to ESCOs 1 and 2 are 0.1 MW and 1 MW, respectively. However, if the EENS is defined as the non-delivered amount, e.g., 2 MW, the maximum expected non-delivered amount is even higher than the accepted amount of ESCO 1. This small example supports that the EENS should be defined and calculated in proportion.

An example can be generated to explain the EENS calculation. Five contingencies are considered with the same probabilities as described in Figure 5.1. Assume that there are two ESCOs, ESCOs 1 and 2, which have bids accepted in class 1 for 10 MW and 20 MW, respectively. Table 5.1 describes the curtailed amounts of ESCOs 1 and 2 for each contingency. The proportions of the curtailed amounts to the accepted amounts are also shown in Table 5.1. Equations (5.3) and (5.4) illustrate how to calculated EENS of each ESCO for auction class 1. The EENS of ESCOs 1 and 2 are 0.0031 (0.31%) and 0.0065 (0.65%), respectively. EES is one minus EENS. Thus, the EES of ESCOs 1 and 2 are 0.9969 (99.69%) and 0.9935 (99.35%), respectively.

Table 5.1 An example of curtailed power for EENS calculation

Contingency	ESCO 1		ESCO 2	
(k)	Curtailed Amount (MW)	$LC_1^{1,k}$	Curtailed Amount (MW)	$LC_2^{1,k}$
1	0.5	0.05	3.0	0.15
2	0.0	0.00	2.0	0.10
3	0.2	0.02	4.0	0.20
4	0.0	0.00	1.0	0.05
5	0.8	0.08	0.0	0.00

$$EENS_1^1 = 0.05*0.01+0.02*0.01+0.08*0.03 = 0.0031 \tag{5.3}$$

$$EENS_2^1 = 0.15*0.01+0.10*0.02+0.20*0.01+0.05*0.02 = 0.0065 \tag{5.4}$$

5.4.3 Power bids

This work assumes that there are two types of bids, power bids and contingency bids. Contingency bids will be explained later. Power bid of an ESCO is composed of bid price, bid amount, and the desired auction class for the bid to be matched. Power bid of a GENCO is the same as power bid of a buyer but with an additional bid specification. The additional bid specification that the GENCO needs to submit is the availability of supplied power.

Supply records of a GENCO need to be kept to ascertain that they satisfy the average power delivery probability of each GENCO. Record duration can be weekly, monthly, quarterly, semi-annually, or yearly. If the supply records of any GENCO in the record duration are lower than the required level, that GENCO is charged for the penalty.

5.4.4 Contingency bids

Apart from power bids, players (GENCOs and ESCOs) can submit contingency bids, which are defined as bids for each remedial action. A contingency bid is composed of bid price, bid amount, an offered remedial action, and an auction class for the contingency bid to be matched. Penalties are imposed for the undelivered remedial actions.

For power, GENCOs and ESCOs can submit bids to sell or buy power. For remedial actions, GENCOs and ESCOs are assumed to submit bids to only sell remedial actions. For examples, ESCOs submit bids for only selling reserves (i.e., allowing load shedding). If ESCOs desire to be more insured when contingencies occur, ESCOs buy power from auctions in the classes with higher availability instead of submitted bids for buying reserves (which are assumed not allowable).

For each contingency, the accepted contingency bids are probably not the same. To ascertain that there will be enough remedial actions from the contingency bids when they are needed, this work assumes that the

maximum accepted contingency bids of all considered contingencies are the accepted contingency bids that the ICA requires the bidders to be able to supply in case of any contingencies.

5.4.5 TRANSCOs

TRANSCOs are assumed to be regulated and need to maintain transmission systems in good conditions. Transmission outages are unavoidable practically; however, TRANSCOs are required to operate transmission systems as best as they can so that transmission outages occur as least as possible. To enforce this, the ICA needs to set an operation standard for TRANSCOs. One possible way is to set the minimum availability of each component of transmission systems and impose charges if the standard is violated. The standard level set allows TRANSCOs to operate and perform maintenance efficiently corresponding to their schedules.

Contingency bids are assumed to be submitted only buy GENCOs and ESCOs but not by TRANSCOs because TRANSCOs are assumed to be regulated. Nevertheless, TRANSCOs should give information about the available resources that can be utilized in case of contingencies to the ICA for each auction period. The ICA then uses the information by TRANSCOs in dispatching the remedial actions.

5.4.6 Auction diagram

Figure 5.2 summarizes all the bids in an auction class (class h). Power bids are submitted by GENCOs and ESCOs. Power bids of GENCOs must include the availability level of the supplied power while power bids of ESCOs do not include the availability level. The availability level of the auction class (r^h) determines the minimum guaranteed availability level of the power that ESCOs will receive. The EES of the auction class (EES^h) determines the minimum EES allowable of the power bought by the ESCOs. The availability levels of the supplied power of a GENCOs can be any values, same as or different from the availability level specified in the auction class. Contingency bids are submitted by both GENCOs and ESCOs. Contingency bids submitted by GENCOs and ESCOs have the same components, types of remedial actions, prices, and amounts. Note that RA (in the figure) stands for remedial action. TRANSCOs are regulated and thus submit the contingency costs, which are composed of types of remedial actions, unit costs, and amounts to the ICA.

Figure 5.3 shows the diagram of l-class auctions. Each class has the same bid components as illustrated in Figure 5.2. In Figure 5.3, there are l auction classes. Class 1 is assumed to have the lowest availability and EES. Higher classes have higher availability and EES than the lower classes. Class l has highest availability and EES. These assumptions and the notations used in Figure 5.3 will be referred for explanations throughout this work. The differences between each class are the specified availability and EES. In addition, bid prices of power and contingency bids in higher classes are probably higher than those in lower classes since the higher classes require higher availability and EES.

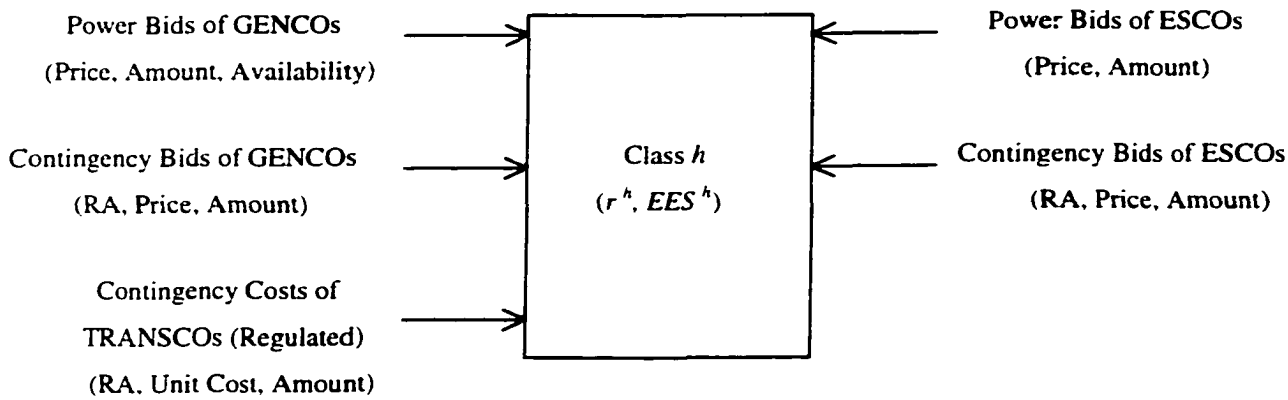

Figure 5.2 Bid components in each class

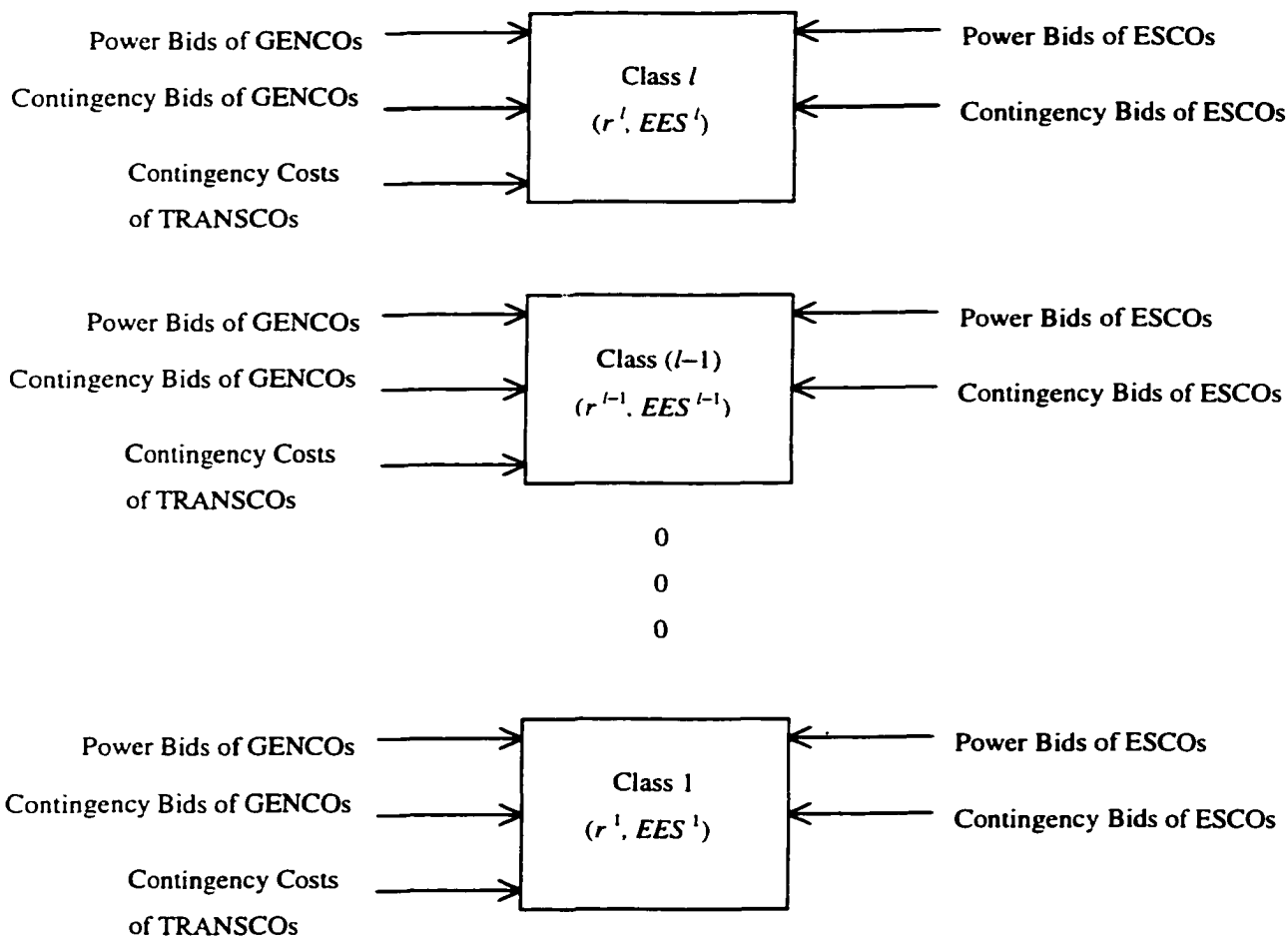

Figure 5.3 An auction diagram for l-class auctions

5.4.7 Remedial actions

Lists of remedial actions for the cost-based market were clearly presented in [Meliopoulos, 1988, Momoh, 1997, Beshir, 1996]. In the deregulated market, some remedial actions that were classified in different categories in the past should be classified into the same category in the deregulated market. For example, generation redispatch and load shedding should no longer be separated because double-sided auctions are used and both GENCOs and ESCOs can submit bids for the market.

Table 5.2 outlines the remedial actions for the deregulated market and separates them according to the providers. Note that remedial actions under TRANSCOs are cost-based because TRANSCOs are assumed regulated. Contingency bids for bus voltage control are assumed to be bid by only GENCOs. Real power dispatch category is composed of reserves and load shedding. Reserves could be separated into spinning reserves and supplemental reserves, which have different responding time frames. However, this work focuses on the steady-state solutions and thus does not separate spinning reserves and supplemental reserves from each other. Similarly, load shedding could be separated into different time frame of responses but is not separated from each other because of the same reason.

In the past, load shedding was classified into interruptible, firm, and critical. In the new paradigm, these three classes of load shedding belong to the same category. The difference between interruptible, firm, and critical is reflected in the contingency bid prices: critical load may be most expensive and interruptible load may be least expensive.

Table 5.2 Remedial actions

GENCOs or ESCOs	TRANSCOs
Real power redispatch	Phase shifter adjustment
Reactive power redispatch	Transformer tap adjustment
Bus voltage control (only GENCOs)	Switched shunt capacitors
	Switched shunt reactor

5.4.8 Optimal remedial action selection

This section presents a LP-based formulation for optimizing the remedial actions when the contingency causes line overloading. The only remedial actions considered are reserves by GENCOs and shed-load by ESCOs. Other remedial actions to cure other problems resulting from contingencies can be incorporated similarly into the formulation but are not in the scope of this work. The LP-based optimal remedial action formulations are well presented in the literature [Meliopoulos, 1988, Horton, 1984], which include other remedial actions not considered in the formulation shown below. The only minor modification for applying those formulations to the auction problem is to change the objective function to be minimizing the cost of

contingency bids submitted by GENCOs and ESCOs and the remedial action costs of TRANSCOs. The cost of each contingency bid can be constructed similarly to which are presented in (5.5). Transmission assessment software packages like TRELSS and TPLAN can also be applied for calculating the optimal remedial actions.

In the formulation presented in this work (5.5), the total cost of contingency bids and the change in transmission usage cost are minimized. Reserves of GENCOs and shed-loads of ESCOs change the transmission flows and thus change the transmission usage cost. This is why the change of transmission usage cost is minimized simultaneously with the total cost of contingency bids. The optimal remedial action shown in (5.5) is for bringing the overloaded lines to the normal condition after the occurrence of a contingency. Formulation (5.5) is similar to the formulation of power auctions shown in (2.1). The differences are that the changes of variables in formulation (5.5) are with respect to the variable values after the contingency occurs. For an example, the angle change of bus i ($\Delta\delta_i^{\,r}$) is the difference between bus i's angle after the optimal contingency bids are applied to the system and bus i's angle after the contingency occurred (which is before the optimal contingency bids are applied). Another difference is that the sign of the total accepted shed-load bids of ESCOs is positive in the loss equation. Other differences are included in the explained notations below. Note that the superscript r is used to differentiate formulation (5.5) from formulation (2.1).

Notations of symbols used in (5.5) are explained as follows:

c^r_{bj}	price of jth buyer's shed-load bid
c^r_{si}	price of ith seller's reserve bid
ΔP^r_{bj}	accepted amount of shed-load bid of jth buyer
ΔP^r_{si}	accepted amount of reserve bid of ith seller
n'	number of ESCOs who submit the shed-load bids
m'	number of GENCOs who submit the reserve bids
$\Delta\delta^{\,r}$	change in bus angle after the remedial actions are applied comparing to the bus angle in case without remedial actions
B'	matrix containing the negative of susceptance of the bus admittance matrix (Y matrix)
B^r_{si}	amount of reserve bid submitted by ith seller
B^r_{bj}	amount of shed-load bid submitted by jth buyer
lsc	loss coefficient vector (details can be seen in [Dekrajangpetch, 1997])
P_{ij}^{r0}	original flow of line between buses i and j before the remedial actions are applied (after the contingency occurred)
P_{ij}^{max}	flow limit of line between buses i and j
trc_i	transmission cost coefficient for bus i

$$
\begin{aligned}
&\min_{\Delta P_{bj}^r, \Delta P_{si}^r, \Delta\delta_i^r, \Delta\delta_j^r} \quad \sum_{i=1}^{m'} c_{si}^r \Delta P_{si}^r + \sum_{j=1}^{n'} c_{bj}^r \Delta P_{bj}^r + \sum_{i=1}^{m'+n'} trc_i \Delta\delta_i^r \\
&s.t. \\
&\underline{\Delta P^r} - B'\underline{\Delta\delta^r} = \underline{0} \\
&\sum_{i=1}^{m'} \Delta P_{si}^r + \sum_{j=1}^{n'} \Delta P_{bj}^r - \underline{lsc} * (\underline{\Delta\delta^r})^T = 0 \\
&P_{ij}^{r0} - B_{ij}^r(\Delta\delta_i^r - \Delta\delta_j^r) \le P_{ij}^{\max} \\
&-P_{ij}^{r0} + B_{ij}^r(\Delta\delta_i^r - \Delta\delta_j^r) \le P_{ij}^{\max} \\
&0 \le \Delta P_{si}^r \le B_{si}^r \\
&0 \le \Delta P_{bj}^r \le B_{bj}^r
\end{aligned}
\tag{5.5}
$$

Note that if the remedial actions are infeasible (i.e., cannot cure the violated operational limits), the contracts of GENCOs will be allowed to be partly or fully taken away. The problem is to be solved with an incorporation of GENCOs contracts to formulation (5.5). The incorporation is at the objective function and in the transmission lost constraints (i.e., conservation of energy). Because the GENCOs contracts are desired to be taken away only when remedial action resources are entirely used up, large cost coefficients are imposed for the GENCOs contracts at the objective function. If the problem is still infeasible, the contracts of ESCOs will be allowed to be partly or fully curtailed and this results in reduction of availability and EES. Incorporation of ESCOs contracts in the formulation is similar to incorporating GENCOs contracts into the formulation. Table 5.3 shows the order of the remedial action problem and the resources used in each order.

Table 5.3 Order of the optimal remedial action problem

Order	Remedial actions	GENCOs Contracts	ESCOs contracts
1	Yes	No	No
2	Yes	Yes	No
3	Yes	Yes	Yes

5.4.9 Payments for remedial actions

Remedial actions that are selected by auctions might or might not be used because the contingencies might or might not occur. The issue is whether the used remedial actions should be paid the same as the unused remedial actions. One argument is that suppliers of remedial actions need to reserve the resources for the remedial actions no matter whether the contingencies occur or not. Thus, remedial actions should be paid no matter whether they are used.

To lessen the complexity in the beginning of implementing these auctions, it would be good to start from paying for the remedial actions fully; i.e., the used remedial actions are paid the same as the unused remedial

actions. As times go on, the ICA needs to make justification to select which approach to use. Note that for the case that remedial actions are paid fully, the charges for remedial action suppliers who default should be high to encourage the suppliers to fully reserve the remedial actions. This work assumes that the suppliers of remedial actions are paid fully regardless of whether they are utilized. In addition, the contingency bids are assumed to be paid at the submitted bid prices.

This works assumes that the remedial actions are paid regardless of their usage. The payments for remedial actions are assumed to be based on the expected values. GENCOs and ESCOs are paid for the expected values of the contingency bid prices. Payment to GENCO i (rev_i^r) for supplying remedial actions is shown in (5.6). Payment to ESCO j (rev_j^r) for supplying remedial actions is shown in (5.7). Payment to TRANSCOs for supplying remedial actions is calculated similarly. The difference is only using unit costs to calculate instead of prices.

$$rev_i^r = \sum_{k=1}^{s} prob^k c_{si}^r \Delta P_{si}^{r,k} \tag{5.6}$$

$$rev_j^r = \sum_{k=1}^{s} prob^k c_{bj}^r \Delta P_{bj}^{r,k} \tag{5.7}$$

5.4.10 Transaction fees

Transaction fees are paid by every player. Transaction fees are one of the ICA's revenues, which are used to pay for expenses of the ICA. There are several ways that can be used to impose the transaction fees. Transaction fees can be either fixed, variable, or both. Fixed transaction fees can be taken from only the bidders whose bids are accepted or from every bidder. If fixed transaction fees are imposed on only the bidders whose bids are accepted, the auction formulation becomes mixed integer programming. This is because an additional set of variables needed to represent the status of each bidder (whether the bid is accepted) is incorporated. If fixed transaction fees are imposed on every bidder, the auction formulation does not change. It could be arguable that fixed transaction fees should be imposed on every bidder. The reason is because a larger number of bidders cause more work for the ICA regardless of their bid acceptances.

Variable transaction fees are imposed in proportional to the accepted amounts. In other words, variable transaction fee for a bidder is equal to the transaction fee rate (t) times the accepted amount of that bidder. This will effectively decrease the bid price of a seller from c_{si} to c_{si}-t and increase the bid price of a buyer from c_{bj} to c_{bj}+t. The objective function of the auction formulation will be changed from (2.1) to be (5.8). Note that equation (5.8) is based on maximization form. The new objective function is composed of three categories: trading surplus, change in transmission usage cost, and transaction fees. Table 5.4 summarizes the objective function. The pricing method described in chapter 3 is not affected by the transaction fees because the

transaction fees are calculated after the auction solution is found. There needs only minor modification to the pricing method in chapter 3 due to the remedial action costs, which will be explained in next section. The total transaction fee is shown in Table 5.4 and the transaction fee imposed to each bidder is equal to the multiplication of the transaction fee rate and the bidder's accepted bid amount.

$$\sum_{j=1}^{n}(c_{bj}+t)\Delta P_{bj}-\sum_{i=1}^{m}(c_{si}-t)\Delta P_{si}-\sum_{i=1}^{m+n}trc_i\Delta\delta_i \tag{5.8}$$

Table 5.4 Objective function of the auction formulation

Category	Quantities
Trading Surplus	$c_{b1}\Delta P_{b1}+\ldots+c_{bn}\Delta P_{bn}-c_{s1}\Delta P_{s1}-\ldots-c_{sm}\Delta P_{sm}$
Change in Transmission Usage Cost	$trc_1\Delta\delta_1+\ldots+trc_m\Delta\delta_m+trc_{m+1}\Delta\delta_{m+1}+\ldots+trc_{m+n}\Delta\delta_{m+n}$
Total Transaction Fee	$t(\Delta P_{b1}+\ldots+\Delta P_{bn}+\Delta P_{s1}+\ldots+\Delta P_{sm})$

5.4.11 Cash flow

There are two groups of revenues and expenditures that the ICA needs to maintain. The first group corresponds to the transactions associated with the power and contingency bids. The second group corresponds to the charges. Figure 5.4 shows the cash flow for the first group. Note that the payments to GENCOs and the payments by ESCOs in figure 5.4 do not include the transaction fees. Transaction fees paid by GENCOs and ESCOs will be used for covering other expenses and charges shown in Figure 5.5. The total payment (excluding transaction fees) by the ESCO is equal to the summation of the total payment to all GENCOs (excluding transaction fees) and TRANSCOs and the total payment for remedial actions. The item listed as payments to GENCOs is the payment for only power. The item listed as payments to TRANSCOs is the payment for transmission usage. The item listed as payments for remedial actions is for contingency bids (of GENCOs and ESCOs) and resources of TRANSCOs used in maintaining availability and EES in each auction class.

Figure 5.5 shows the cash flow of the ICA for charges. From the picture, there are four sources of charges collected by the ICA. They are transaction fees of all players, charges from GENCOs who supplies with lower delivery probability than the level specified in the contract, charges from TRANSCOs whose systems have higher outage probabilities than the level specified in the contract, and charges imposed on remedial action suppliers who default. The total amount of money collected by the ICA must be enough to cover the payments for ESCOs who receive power with lower availability or EES than the levels specified in the contract. The issues of how much the charges should be are not in the scope of this work. Note that the transaction fees shown in the picture are after other expenses of the ICA. Employee salaries are an example of other expenses of the ICA .

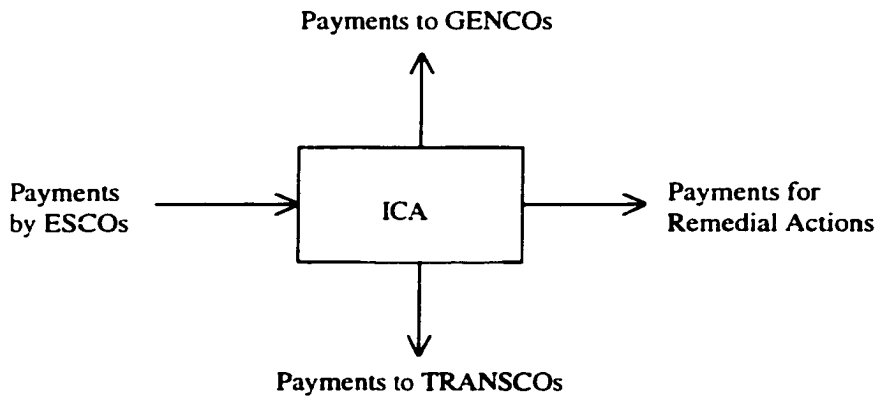

Figure 5.4 Balance of payments

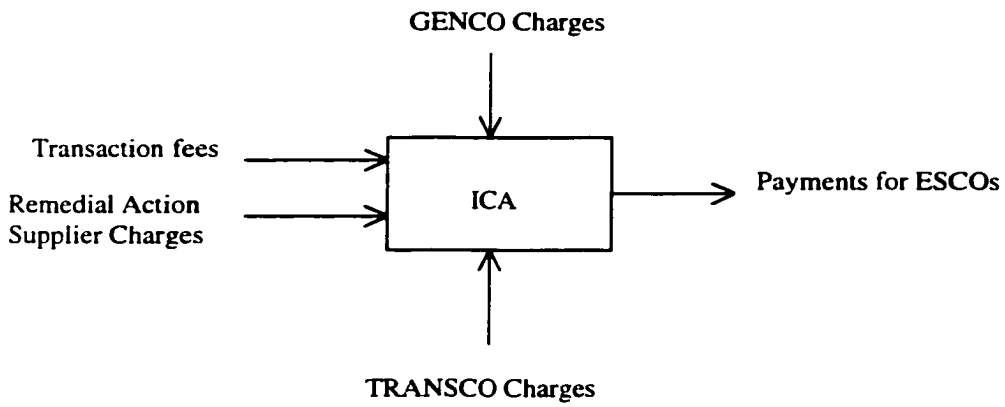

Figure 5.5 Cash flow of charges

5.4.12 Sequential bid matching

Due to the complexities of power flow equations and incorporating optimal remedial actions to the auction, the method does not consider all auction classes together like what was described in chapter 4. Each auction class is treated separately and sequentially. This work begins a bid-matching process from the class with lowest availability to the class with higher availability successively and ends the bid matching process at the class with highest availability. At each auction class, power flow constraints are embedded in the auction formulation. Bus voltages and line flows are updated according to the auction solution at the end of a class and then used as an initial condition for the auction problem in the next class, and so on.

Note that the availability levels of the bought power in lower classes are equal to the values already calculated while the bids in the higher class are being matched. In case that the calculated availability or EES of

auction class h is higher than the specified level, this can be utilized in matching bids of higher classes. For an example, after the auction in class 1 is performed, the calculated availability level is 0.92, which is 0.02 higher than the specified level (0.90). Thus, while the bids are being matched in class 2, the 0.02 extra availability level can be utilized in matching bids in class 2. In other words, a certain number of considered contingencies that have total probabilities not exceeding 0.02 can result in curtailing loads in auction class 1 while the bids are being matched in class 2, provided that this does not violate the EES required in auction class 1.

There are two types of bids for each auction class: power bids and contingency bids. In each class, matching processes for power bids and contingency bids are iteratively. Power bids are matched first and then are followed by contingency bids. Processes for matching power bids in different classes are the same. The only difference is bid prices in higher availability classes are probably higher than those in lower availability classes. Contingency bid matching distinguishes each class by different LOLP and EES values required in different classes.

5.5 Auction scheme

This section explains a scheme that the ICA can use to match power bids and contingency bids for all auction classes. The notations used assume there are l auction classes, class 1 as the lowest availability available and class l as the highest availability available class. The specified availability of class h is denoted by r^h. The calculated LOLP of class h from the auction is denoted by $LOLP^h$. There are s contingencies considered, contingency 1 as most severe and contingency s as least severe.

There are three major iterative processes in the scheme. The first major iterative process is for solving the master problem that consists of the power auction problem and the remedial action problem to ascertain the availability and EES of each class. Its iteration is denoted by i. The second iterative process belongs to the simplex method used to solve the power auction problem. Its iteration is denoted by j. The third iterative process belongs to the remedial action problem, in which the contingencies considered are imposed individually and then the expected values of the required remedial actions and LOLP are calculated based on the contingency probabilities. The index of contingency is denoted by k.

5.5.1 Master problem

The scheme of the master problem is described below. Note that in step 3, if the high expected LOLP or EENS of class h is the case, the ESCOs with most curtailed load will be lowered on their allowable accepted bid amounts in step 5 for the next iteration i. The information from the simplex method indicates which iterations that the load is curtailed. The GENCOs who supplied to the curtailed ESCOs in those iterations will also be lowered on their allowable accepted bid amounts in step 5 for the next iteration i. If the high expected remedial action cost is the case, the similar procedure is applied. Instead, the difference is to observe which iterations that the expected remedial action cost results in lower (higher) prices than what are submitted by GENCOs (ESCOs). Note that a limit can be set on iteration i.

Step 1: Initialization, start at class h=1. Iteration i=0.

Step 2: Perform auctions on power bids of class h. Details are in section 5.5.2.

Step 3: Check whether the $LOLP^h$ is less than or equal to the $(1-r^h)$ and the calculated EENS is less than or equal to the specified (1-EES) of class h? Also check whether the expected remedial cost results in lower (higher) prices than what are submitted by GENCOs (ESCOs)? If the answers for all are no, go to step 4. Otherwise, go to step 5.

Step 4: Update bus voltages and line flows based on the auction solution and move to the next auction class (h=h+1). If the auction class exceeds the highest auction class (h>l), done. Otherwise, go to step 2.

Step 5: Impose the constraints to the power auction problem. Increment i to i+1 and redo step 2.

5.5.2 Power auction problem

The scheme of the power auction problem is described below. Note that in step 2 the changes of accepted bids can be separated into two transactions. This is, as described in chapter 3, because there have been at most three players that have their accepted bids changed between iterations. Thus, the changes in accepted bids between iterations can be separated into 2 transactions. For example, if changes in accepted bids of sellers 1 and 2 are 5 and 7 MW and change in accepted bid of buyer 1 is 12 MW, the first transaction is sale of 5 MW from seller 1 to buyer 1. The second transaction is sale of 7 MW from seller 2 to buyer 1.

In step 3, the remedial action problem is solved for every additional transaction attained from the updating in the simplex method. This is to ascertain the payments of remedial actions are taken from the associated sellers and buyers whose transactions result in need of remedial actions. In addition, this is also to ascertain that the remedial action costs are not charged to the sellers and buyers whose transactions do not result in need of remedial actions. This method results in no need of arbitrary allocation of remedial action costs when the final solutions are obtained.

In step 4, the scheme proposed in chapter 3 is applicable. The only difference is to take the expected remedial action cost into account. Instead of dividing the trading surplus equally between the seller and buyer of each transaction, the difference between the trading surplus and the expected remedial action cost is divided equally.

In step 5, the $LOLP^h$ is calculated as (5.1) and the $EENS_b^h$ is calculated as (5.2). The expected remedial action cost is calculated from the summation of the products of contingency probabilities and the remedial action costs for all contingencies considered.

Step 1: Initialization, simplex iteration j=0.

Step 2: Update the solution to the next iteration of the simplex method, j=j+1. Trace the changes of the accepted bids between the iterations and then separate into 2 transactions.

Step 3: Solve remedial action problem (details in section 5.5.3) for transaction 1 and then solve remedial action problem for transaction 2.

Step 4: Calculate the revenue of each GENCO and payment of each ESCO as described in chapter 3.

Step 5: If the optimal solution is found as indicated by the simplex method, aggregate the results from all the iterations of the simplex method. Then calculate the LOLP ^{h}, $EENS_b^h$, and the expected remedial action cost. Return to section 5.5.1. If the optimal solution is not found, go to step 2.

5.5.3 Remedial action problem

The scheme of the remedial action problem is described below. The remedial action problem is to match contingency bids to ascertain the specified availability and EENS levels. In step 5, the optimal remedial action can be found by applying methods described in section 5.4.8.

Step 1: Incorporate the transaction from the power auction problem (section 5.5.2) to the power system.

Step 2: Initialize contingency h=1.

Step 3: Check whether any operating constraints are violated, e.g., any overloaded lines? If yes, go to step 5. Otherwise, there are no remedial actions and load curtailing required. Go to step 4.

Step 4: Increment to the next contingency (h=h+1) and redo step 3.

Step 5: Find optimal remedial actions. If there is a solution, calculated the cost associated with the remedial actions and go to step 4. Then go to step 4.

5.6 Results

This section presents an auction result in an auction class. Assume that the specified availability and EES of this auction class are 0.95 and 0.95. The data used in implementing results in chapter 3 are used here with some modifications. The four-bus system in Figure 3.1 and its data in Table 3.1 are utilized here with only modifications on the line limit. The line limits of lines 1 to 4 are changed to 73, 90, 110, 75 MW, respectively to accommodate this result. The submitted and accepted power bids are the same as Table 3.2. The submitted and accepted contingency bids are shown in Table 5.5. Table 5.6 describes the considered contingencies. For ease of explanation, only four contingencies are considered. In Table 5.6, the second column describes the line that is out of service. Assume that there is no transaction fee. Losses are neglected for the optimal remedial action problem and dc load flow method is utilized.

The accepted power bids and the associated results for power bids are the same as Tables 3.3 and 3.4. Table 5.7 shows the accepted contingency bids and curtailed load for each contingency. This work assumes that the accepted contingency bid of each supplier is the maximum of all contingencies. Thus, the accepted amount in Table 5.5 is the maximum of the amounts shown in Table 5.7. The details of the calculated remedial actions between iterations are not shown because its size is large. In Table 5.7, the accepted contingency bid amounts of ESCO 1 indicate the possible shed-load amount for the associate contingencies. The last column shows the

possible curtailed amount of ESCO 1's power for the associate contingencies. Note that the shed-load is subject to the contingency bid contracts while the curtailed load is subject to the power bid contract. Only contingency 3 results in load curtailment and thus the calculated LOLP is the probability of contingency 3, which is 0.02. Thus, the calculated availability is 0.98, which is higher than the required level of this auction class, 0.95. The curtailed amount is 20 MW and the accepted bid amount is 20 MW for ESCO 1. The calculated is thus 0.02*20/20, which is 0.02 and thus the calculated EES is 0.98, which is higher than the required level of this auction class, 0.95.

In Table 5.8, payments for remedial actions between iterations are listed separately for each contingency and the expected payment is calculated. Then the expected payment is divided equally to the seller and buyer between iterations. Table 5.9 shows the GENCOs' revenues and ESCOs' revenues between iterations. The values shown in Table 5.9 are different from those in Table 3.5 because of the remedial action costs. In Table 5.10, the revenues, payments, and prices are summarized. Comparing to Table 3.6, GENCOs 1 and 2 sell power at lower prices and ESCO 1 buys power at higher price because of the remedial action costs.

Table 5.5 Submitted and accepted contingency bids

Bids	GENCO 1	GENCO 2	ESCO 1
Price ($/MWh)	1.00	2.00	3.00
Submitted Amount (MW)	5.00	10.00	15.00
Accepted Amount (MW)	0.03	2.00	10.05

Table 5.6 Contingency descriptions and their probabilities

Contingency	Description	Probability
1	Line 1	0.05
2	Line 2	0.06
3	Line 3	0.02
4	Line 4	0.03

Table 5.7 Accepted contingency bids and curtailed load for each contingency

Contingency	Generation Reserve/Shed Load			Curtailed Load at
	GENCO 1 (MW)	GENCO 2 (MW)	ESCO 1 (MW)	ESCO 1 (MW)
1	0.03	0.03	0.00	0.00
2	0.00	0.00	0.00	0.00
3	0.00	0.00	0.00	20.00
4	0.00	2.00	10.05	0.00

Table 5.8 Payment for the contingency bids

Iterations	Payment ($/h)				Expected
	Contingency 1	Contingency 2	Contingency 3	Contingency 4	Payment ($/h)
1-7	0	0	0	0	0
7-8	0.06	0	0	4.0094	0.1233
8-9	0	0	0	23.89	0.7169
9-10	0	0	0	0	0
10-11	0	0	0	6.24	0.1874
11-12	0.03	0	0	0	0.0015

Table 5.9 Tracing the changes in revenues and payments between iterations

Iterations	GENCO 1's Revenue ($/h)	GENCO 2's Revenue ($/h)	ESCO 1's Payment ($/h)
1 to 7	0.00	0.00	0.00
7 to 8	94.94	0.00	95.06
8 to 9	0.00	79.65	80.37
9 to 10	0.00	0.00	0.00
10 to 11	0.00	20.82	21.00
11 to 12	-41.72	41.70	0.00
Total	53.22	142.15	196.44

Table 5.10 Summary of revenues, payments, and prices

	GENCO 1	GENCO 2	ESCO 1
Revenue from Table 5.9 ($/h)	53.22	142.15	0.00
Payment from Table 5.9 ($/h)	0.00	0.00	196.44
Transmission Usage Payment ($/h)	2.71	-7.97	18.89
Net Revenue/Payment ($/h)	50.51	150.12	215.33
Net Sold/Bought Amount ($/h)	5.09	15.00	20.00
Net Price ($/MWh)	9.92	10.01	10.77

5.7 Chapter conclusions

This chapter explains the proposed market structure to be used with electric power auction when different availability and EES levels are the properties to distinguish electricity as heterogeneous products. GENCOs and ESCOs can submit two types of bids, power bids and contingency bids. The contingency bids are bids to supply

remedial actions. Remedial actions are also supplied by TRANSCOs but based on costs. Fixed and variable transaction fees are incorporated into the objective function of the auction problem. The same pricing scheme in chapter 3 is applied with minor modification to incorporate the remedial action costs. As in chapter 3, implementation involves tracing the results between iterations of the simplex method. The auction structure proposed does not incorporate any arbitrary allocations of costs to the bidders. Using the proposed method, consumers are given the opportunity to pay for increased availability and suppliers are adequately compensated for their additional efforts that ensure the power will be there for those who truly need it.

In the context of this work, all calculations are for steady-state results. The availability and EES are calculated based on the LOLP and EENS described in [Sullivan, 1977]. The calculation does not involve the risk index developed in [McCalley, 1999b]. The calculation does not involve dynamic or transient behaviors of the system.

6 ALTERNATIVE IMPLEMENTATIONS OF ELECTRIC POWER AUCTIONS

6.1 Chapter overview

Auctions are considered the pricing mechanism of choice for the competitive electric power market. This chapter outlines alternative structures for auction implementation. The issue of choosing between single-sided and double-sided auctions is discussed in this chapter. To ensure the reliability of the power system, some ancillary services must be provided. This chapter addresses various issues of ancillary services; for example, ancillary services should be bundled or unbundled (i.e., traded under separate contracts). Previous research has indicated that auctions can be formulated as a linear program and this linear program can be solved efficiently. However, when mixed integer solutions are required, we may be unable to formulate the problem as a linear program. This chapter discusses factors concerning this problem and attempts to identify whether auctions must be implemented as a mixed integer program. This chapter considers auctions in which electricity is treated as a homogeneous product and players are not specified.

6.2 Introduction

Improvement in auction formulations can be seen in previous research. [Sheblé, 1994a] described commodities and financial markets and compared the electricity market to them. Engineering research problems on using cash, futures, planning, and swap markets with the electricity market were characterized in [Sheblé, 1994b]. [Sheblé, 1994c] outlined a method to use auction systems in cash and futures markets to provide reserve margins for generator and transmission line forced outages. Post et al. used linear programming (LP) to implement single-sided auctions, sellers bidding price and quantity with reservation price, without simultaneous consideration of network constraints [Post, 1995]. Network constraints were considered in previous papers [Fahd, 1992a], [Fahd, 1992b]. [Sheblé, 1996b] identified the technical issues essential to change the national infrastructure from a vertically integrated industry to horizontally integrated industry. [Kumar, 1996b] described the process cycle of auctions. [Kumar, 1996a] presented a framework for double-sided auction with reserve margin and transmission losses using LP. The network constraints are simultaneously considered in implementing auctions. [Kumar, 1997] developed the auction simulator to simulate the auction market. The framework of allocating futures contract commitments via forward market was also presented in [Kumar, 1997]. [Dekrajangpetch, 1997] illustrated how to implement single-sided and double-sided auctions using LaGrangian relaxation, interior-point linear programming, and upper-bounded linear programming and described the problems associated with using LaGrangian relaxation to implement auctions. The mathematical models used in

implementing the security-constrained bid clearing system for the New Zealand Electricity Market have been described in [Alvey, 1997].

Trading in the deregulated environment has begun in some places already. However, many issues concerning auction implementation are not settled. One of the issues is to implement auctions by LP or mixed-integer LP. This chapter outlines alternative structures for auction implementation and shows the enhancement of the auction formulation from that developed by [Kumar, 1996a].

Section 6.3 illustrates the formulation for double-sided auctions with spinning and supplemental reserves using linear programming (LP). Section 6.4 describes how to implement some hard constraints of the formulation in LP. Section 6.5 discusses alternative structures from what is shown in section 6.3. Section 6.6 presents conclusions.

6.3 Auction formulation

The auction formulation shown in this section is to incorporate ancillary service bids to the auction. The formulation is enhanced from [Kumar, 1996a]. The formulation falls into the case that electricity is considered homogeneous product and players are not specified. The formulation represents the case when bidders need to submit bids for spinning reserves and supplemental reserves besides bids for power. The accepted bid amounts of spinning reserves and supplemental reserves are assumed to be the less between the minimum proportions of the accepted bid amounts of power and the maximum limits of accepted spinning and supplemental reserve amounts.

The ancillary services included in this formulation are transmission losses, spinning reserves, and supplemental reserves. Spinning reserves and supplemental reserves are assumed to be submitted as bids. Transmission losses are priced according to the pricing method in chapter 3. Transmission losses, spinning reserves, and supplemental reserves are bundled; i.e., traded in the same market as one contract with energy. Regulation, automatic generation control (AGC), and load following can be incorporated into the formulation the same as the spinning and supplemental reserves if they are considered bundled. Regulation and supplemental control (AGC) are for similar purposes. They differ in time frame. The time frames of regulation and AGC are 6 seconds and half an hour respectively. The frequency of the auction in the formulation below is every half an hour. There are various possible formulations. Alternative formulations will be discussed in section 6.5.

All the quantities in the formulation are in per unit, except the bus angles are in radian and the bids' prices are in \$/MWh. The symbols used for the formulation are shown below. Note that GENCO i is at bus i and ESCO j is at bus $m+j$.

c_{si}	price of ith seller's bid for active power
c_{bj}	price of jth buyer's bid for active power
cs_{si}	price of ith seller's bid for spinning reserve

cs_{bj}	price of jth buyer's bid for spinning reserve
cr_{si}	price of ith seller's bid for supplemental reserve
cr_{bj}	price of jth buyer's bid for supplemental reserve
ΔP_{si}	accepted amount of active power of ith seller
ΔP_{bj}	accepted amount of active power of jth buyer
ΔPm_{si}	amount of active power of all other contracts of ith seller
ΔPm_{bj}	amount of active power of all other contracts of jth buyer
ΔQ_{si}	change in reactive power of ith seller
ΔQ_{bj}	change in reactive power of jth buyer
S_{si}	accepted amount of spinning reserve for ith seller
S_{bj}	accepted amount of spinning reserve for jth buyer
S_{si}^{max}	maximum limit of spinning reserve for ith seller
S_{bj}^{max}	maximum limit of spinning reserve for jth buyer
ks_s	required ratio of spinning reserve for sellers
ks_b	required ratio of spinning reserve for buyers
R_{si}	accepted amount of supplemental reserve for ith seller
R_{bj}	accepted amount of supplemental reserve for jth buyer
R_{si}^{max}	maximum limit of supplemental reserve for ith seller
R_{bj}^{max}	maximum limit of supplemental reserve for jth buyer
RR^{max}	maximum ramp-rate limit
kr_s	required ratio of supplemental reserve for sellers
kr_b	required ratio of supplemental reserve for buyers
n	number of buyers
m	number of sellers
$\Delta\delta_i$	change in ith bus angle
$\Delta\delta^{max}$	maximum limit of change in bus angle
B'	matrix containing the negative of susceptance of the bus admittance matrix (Y matrix)
B_{si}	amount of active power submitted by ith seller
B_{bj}	amount of active power submitted by jth buyer
P_{ij}^{0}	original active flow of line between buses i and j
ΔP_{ij}	change in active flow of line between buses i and j
P_{ij}^{max}	active flow limit of line between buses i and j
trc_i	transmission cost coefficient for bus i
K_p	coefficient for active power flow constraints
K_q	coefficient for reactive power flow constraints

PF_i power factor of ith bus

PF^{min} minimum power factor allowed for each bus

$$Maximize \sum_{j=1}^{n} c_{bj}\Delta P_{bj} - \sum_{i=1}^{m} c_{si}\Delta P_{si} + \sum_{j=1}^{n} cs_{bj}S_{bj} - \sum_{i=1}^{m} cs_{si}S_{si} + \sum_{j=1}^{n} cr_{bj}R_{bj} - \sum_{i=1}^{m} cr_{si}R_{si} - \sum_{i=1}^{m+n} trc_i\Delta\delta_i \quad (10.1)$$

The objective function is composed of surplus in trading power, surplus in trading spinning reserve, surplus in trading supplemental reserve, and the negative of the transmission cost. The surplus is defined as the difference between the buyers' revenue and the sellers' cost. Transmission costs (*trc*) are converted from transmission costs of lines into transmission costs of buses (2.2). The negative of the transmission cost indicates that the transmission cost is minimized. The objective function (10.1) is maximized subject to the following constraints:

6.3.1 Active power constraints with losses

The active power flow constraints and conservation of active power equation are manipulated to be constraint (10.2). Note that Kp is calculated from the real power loss coefficients and B' matrix. The manipulating procedure can be seen in [Dekrajangpetch, 1997]. Formula of Kp is also shown in [Dekrajangpetch, 1997]. As shown in [Fahd, 1992a, Fahd, 1992b], an iterative procedure is normally used.

$$\sum_{i=1}^{m} Kp_i\Delta P_{si} + \sum_{j=1}^{n} Kp_{m+j}\Delta P_{bj} = 0 \quad (10.2)$$

6.3.2 Reactive power constraints with losses

The reactive power flow constraints and conservation of reactive power equation are manipulated to be constraint (10.3). Note that Kq is calculated from the reactive power loss coefficients and B' matrix. The manipulating procedure of (10.3) is similar to that of (10.2). As shown in [Fahd, 1992a, Fahd, 1992b], an iterative procedure is normally used.

$$\sum_{i=1}^{m} Kq_i\Delta Q_{si} + \sum_{j=1}^{n} Kq_{m+j}\Delta Q_{bj} = 0 \quad (10.3)$$

6.3.3 Transmission line flow limits

An iterative procedure is used to limit the complex flow by limiting the real and reactive flows. Equation (10.4) shows the flow limit. The change in flow, ΔP_{ij} is approximated as (10.5). Similar constraints are used for reactive flows.

$$\left|P_{ij}^{0} + \Delta P_{ij}\right| \le P_{ij}^{\max} \tag{10.4}$$

$$\Delta P_{ij} = -B'_{ij}(\Delta\delta_i - \Delta\delta_j) \tag{10.5}$$

6.3.4 Sellers and buyers' bid amount

The bid offered can be used partially or completely.

$$0 \le \Delta P_{si} \le B_{si} \tag{10.6}$$

$$0 \le \Delta P_{bj} \le B_{bj} \tag{10.7}$$

6.3.5 Spinning reserve obligations

Spinning reserve obligations of sellers and buyers are shown in (10.8) and (10.9). Conservation of spinning reserve is shown in (10.10).

$$S_{si} = \min(ks_s \Delta P_{si}, S_{si}^{\max}) \tag{10.8}$$

$$S_{bj} = \min(ks_b \Delta P_{bj}, S_{bj}^{\max}) \tag{10.9}$$

$$\sum_{i=1}^{m} S_{si} - \sum_{j=1}^{n} S_{bj} = 0 \tag{10.10}$$

6.3.6 Supplemental reserve obligations

Supplemental reserve obligations of sellers and buyers are shown in (10.11) and (10.12). Conservation of supplemental reserve is shown in (10.13).

$$R_{si} = \min(kr_s \Delta P_{si}, R_{si}^{\max}) \tag{10.11}$$

$$R_{bj} = \min(kr_b \Delta P_{bj}, R_{bj}^{\max}) \tag{10.12}$$

$$\sum_{i=1}^{m} R_{si} - \sum_{j=1}^{n} R_{bj} = 0 \tag{10.13}$$

6.3.7 Ramp rate

Equations (10.14) and (10.15) represent ramp-rate constraints for sellers and buyers. Up-ramp-rate limit is assumed to be equal to down-ramp-rate limit. Note that *t-1* indicates the former period before auction.

$$\left|(\Delta P_{si} + \Delta Pm_{si}) - (\Delta P_{si}^{t-1} + \Delta Pm_{si}^{t-1})\right| \le 0.5RR^{\max} \tag{10.14}$$

$$\left|(\Delta P_{bj} + \Delta Pm_{bj}) - (\Delta P_{bj}^{t-1} + \Delta Pm_{bj}^{t-1})\right| \le 0.5RR^{\max} \tag{10.15}$$

6.3.8 Bus angle limit

Bus angle limits are shown in (10.16). Note that stability margins may be represented with more sophisticated models.

$$|\Delta\delta_i| \le \Delta\delta^{\max} \tag{10.16}$$

6.3.9 Relation between active and reactive power

$$PF_i \ge PF^{\min} \tag{10.17}$$

Note that all variables are nonnegative except all $\Delta\delta_i$ are free variables. Constraints (10.4) to (10.9), (10.11) to (10.12), and (10.14) to (10.15) are for all *i* from *1* to *m* and all *j* from *1* to *n*. Constraints (10.16) and (10.17) are for *i* from *1* to *m+n*.

6.4 Handling constraints

Some constraints are modified so that they can be solved with LP. Some constraints that require modification are:

6.4.1 Absolute constraints

Constraints (10.4), (10.14), (10.15), and (10.16) are in absolute form. The general form of an absolute constraint is shown in (10.18) and it is modified to two constraints in (10.19). Note that *F(P)* indicates a function of *P* and *U* indicates a constant.

$$|F(P)| \le U \tag{10.18}$$

$$-U \le F(P) \le U \tag{10.19}$$

6.4.2 Reserve constraints

Reserve constraints (10.8), (10.9), (10.11), and (10.12) can be generalized as (10.20). Constraint (10.20) shows that S is forced to be either $k\Delta P$ or S^{max}. This concept can be explained according to Fig. 6.1. S is equal to a constant ratio, k, of ΔP until S is equal to S^{max}. In other words, ΔP is equal to S^{max}/k. After this, S is equal to S^{max} no matter how much ΔP is. Constraint (10.20) can be modified to be (10.21) and (10.22), which can be implemented by LP.

$$S = \min(k\Delta P, S^{max}) \tag{10.20}$$

$$S = k\Delta P \tag{10.21}$$

$$S \le S^{max} \tag{10.22}$$

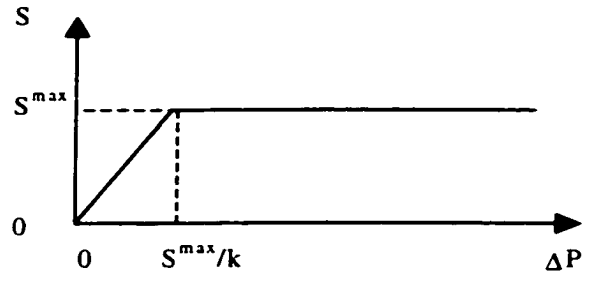

Figure 6.1 Reserve constraint

6.4.3 Non-negativity constraints

Free variables, $\Delta\delta_i$ are changed as (10.23).

$$\Delta\delta_i = \Delta\delta_i^+ - \Delta\delta_i^-; \Delta\delta_i^+, \Delta\delta_i^- \ge 0 \tag{10.23}$$

6.5 Alternative structures

The alternative structures for auctions are outlined. The ICA must know all transactions each player has to operate the system economically and reliably. This makes the net power at each bus a known quantity in the formulation. Thus, the ICA should supervise the implementation of every contract between parties by incorporating all of them as preconditions into the auction formulation. This will be effective only if the ICA knows all transactions and is enabled to enforce all transactions with sufficient penalties.

6.5.1 Singled-sided auctions VS double-sided auctions

Both sellers and buyers can specify the prices and amounts of bids as they desire for double-sided auctions. They can adjust the bids to maximize their own profits. For one-sided auctions, such as seller bidding only, only sellers submit price and quantity bids to the auction and buyers specify only the amount of power desired. Sellers might have to sell cheap power because all sellers submitted low price bids depends on the pricing method. This problem can be lessened if a seller can specify a reservation price. However, this is inflexible to buyers. This is true for all one-sided auctions, since one of the two sides does not submit a price. These arguments indicate the inefficiency of one-sided auctions.

6.5.2 Bundled VS unbundled ancillary services

If an ancillary service is unbundled, the supplier and the buyer have to be identified for each ancillary service contract. This will allow the ICA to identify who is entitled to the ancillary service. If the ancillary service is bundled, the service is included with the energy contract that clearly lists the sellers and buyers. This enables the ICA to monitor the use of all ancillary services. For transmission loss service, it is hard to know the power flow amongst specific lines without knowledge of all contracts. Additionally, it is hard to monitor and accumulate all flows on an individual contract basis, especially with inadvertent flows. Thus, it is difficult to bid the losses separately.

6.5.3 Spinning reserves and supplemental reserves

In the formulation, bids' prices of power, spinning reserve, supplemental reserve are different. This is for showing the formulation generally. If bids' prices are different, players will have more flexibility in specify bid prices.

Should reserve transactions that have been used be the same price as the transactions that have not been used? If they are not the same, there will be more markets. The question is whether it is worthy to have more markets?

Equations (10.10) and (10.13) which show conservation of spinning reserve and supplemental reserve neglect losses due to these reserves. This is because losses are small and only seldom will reserves be used.

6.5.4 Frequency of auctions

Auctions can be conducted every 15, 30 or 60 minutes. Frequent auctions cause more transaction costs while they give more flexibility in scheduling for each party.

6.5.5 Ramp rate

Ramp rate constraints are endemic to specific equipment. Some feel that the owners within the bids offered should implicitly handle equipment constraints. Thus, the ICA would not supervise the equipment use by every party.

6.5.6 Reactive power

There are two possible approaches to implement reactive power. The first approach is implement reactive power constraints (10.3) and (10.17) in the formulation. This approach has difficulty that (10.17) is required to be linearlized. The second approach allows players to bid for reactive power. The objective function will have additional terms of reactive power bids for this approach. Constraint (10.3) is still implemented but constraint (10.17) is eliminated. This approach can avoid linearizing constraint (10.17) but there is one more market for the auctions that causes more complexity.

6.5.7 Linear programming or mixed-integer programming

If the bids are required to submit in blocks and one block of bid is big, auctions have to be formulated in mixed-integer programming. This will cause a lot more difficult to solve. In fact, the power the buyers receive may be not in block due to sales to cover losses. Thus, submitting bids in blocks when the block size is big may not facilitate loss charges. However, if the size of bid is of same size as solution tolerance, then the auction can still be formulated in LP and solved very efficiently.

6.6 Chapter conclusions

This chapter outlines alternative structures for auctions. Various questions on selecting the auction structures are listed. The issue is to compromise between flexibility and complexities from additional markets. The auction considered in this chapter is when electricity is treated as a homogeneous product and players are not specified. The formulation of auctions including ancillary services is presented. LP seems to be favorable to mixed-integer LP because of its ability to be solved quickly and the difficulty to sell and buy power in blocks because losses cause the power sold and bought not in block. Although we want the market to be free to fulfill the purpose of deregulation, we still require regulation, the maximum amount of reserves, etc. These limits are set for operating the system economically and reliably.

7 INTERIOR-POINT LINEAR PROGRAMMING ALGORITHM FOR AUCTION METHODS

7.1 Chapter overview

Interior-point programming (IP) has been applied to many power system problems because of its efficiency in solving large problems. This chapter illustrates the application of interior-point linear programming (IPLP) to implement an auction. An extended IPLP algorithm is developed and used in this chapter. This extended IPLP algorithm can find the exact optimal solution (i.e., exact optimal vertex) and can recover the optimal basis. This is a desirable characteristic because sensitivity analysis can be performed after the optimal basis is found. The sensitivity analysis performed in this chapter analyzes changes in the auction solution as a result of (1) an increase in bid's price, (2) an increase in flow limit of transmission line. This extended algorithm is expanded from the affine-scaling primal algorithm. The concept used in this extended algorithm to find the optimal vertex and optimal basis is simple.

7.2 Introduction

Interior-point programming (IP) has been applied to power system problems. Some power system problems were solved by interior-point linear programming (IPLP) [Yan, 1996] while some were solved by interior-point quadratic programming [Wu, 1993, Granville, 1994, Momoh, 1994, Momoh, 1995, Wei, 1996, and Torres, 1996]. IP has been applied to solve optimal power flow (OPF) problems [Wu, 1993, Momoh, 1995, and Torres, 1996]. IP has been used to solve security-constrained economic dispatch calculation (EDC) problem [Yan, 1996]. [Granville, 1994] handled optimal reactive dispatch problem by IP. [Wei, 1996] utilized IP to solve OPF and EDC problems. [Momoh, 1994] implemented EDC and optimal VAR dispatch by IP. There has been no research reported on applying IP to auction problems.

IPLP is unable to find an exact optimal solution, but rather finds a solution that is very close to the optimal solution. Another drawback is that sensitivity analysis cannot be ordinarily done with IPLP because the optimal basis is not generally available [Ponnambalam, 1992]. Although the solutions by IPLP are converging to the points on the boundary of the feasible region, these solution points may not be the basis [Marsten, 1989]. Research has been conducted in search of a method of eliminating these drawbacks. [Kojima, 1986] incorporated a numerical test and the derived sufficient condition into Karmarkar's algorithm to determine if a given variable is an optimal basic variable. A special simplex algorithm using the concept of super-basic variables was used to recover the optimal basis after terminating from applying dual affine interior point algorithm to solve optimization problems [Marsten, 1989]. The drawback of the basic recovery method described in [Marsten, 1989] was that it was computationally expensive. Experiments [Marsten, 1989] pointed

out that recovery of an optimal basis could require more execution time than was required to solve the problem by dual affine method. [Megiddo, 1991] showed a polynomial time algorithm that found an optimal basis when any pair of optimal solutions for the primal and dual problems was given. This optimal basis was optimal for both the primal and dual problems. [Ye, 1992] developed a termination procedure that was guaranteed to find an exact solution on the optimal face in finite time. A heuristic basis recovery procedure was implemented to hydro-scheduling optimization problems [Ponnambalam, 1992]. [Bixby, 1994] described a method for recovering an optimal basis from a primal-dual interior point solution. This approach was similar to that of [Marsten, 1989]. IPLP and simplex pivoting algorithms have been integrated to obtain the optimal basis [Anderson, 1996].

The purpose of the work described here is to illustrate the application of IPLP to auction methods. An extended IPLP algorithm is developed and used in this work. This extended IPLP algorithm can find the exact optimal solution (i.e., exact optimal vertex) and can recover the optimal basis. The optimal basis can be recovered in a straightforward way. A major benefit of this result is that sensitivity analysis can be performed after the optimal basis is found. This extended algorithm is expanded from the affine-scaling primal algorithm. The concept used in this extended algorithm to find the optimal vertex and optimal basis is simple. Note that the exact optimal vertex solution is desired for auctions because the solution must be fair and uniquely identify assignments between buyers and sellers. Thus, fairness is measured by the exactness of the solution.

The remainder of this chapter is organized as follows. Section 7.3 describes the extended algorithm. Section 7.4 explains the system data for implementing results in section 7.5. Section 7.5 illustrates auction results under a scenario of bids and power system network. The sensitivity analysis is also performed in this section. The effects of changing the bids' prices and transmission line flow limits are studied. Note that the sensitivity analysis used to delineate the benefits of the extended algorithm is the linear-programming-based sensitivity, as seen in [Bazaraa, 1990, pages 278-301]. However, the example results of sensitivity analysis in section 7.5 were performed by resolving the auction problems with the changed parameters. The linear-programming-based sensitivity analysis method should be performed for non-prototype software. The same results can be acquired. The problem was resolved because this is simpler than coding the rules for sensitivity analysis, especially for the small example in this work. For large problems, the linear-programming-based sensitivity analysis method is preferred. Section 7.6 presents conclusions.

7.3 Extended IPLP algorithm

The extended algorithm is expanded from the affine-scaling primal algorithm. The explanation of the algorithm is divided into two parts. The first part gives the basic concept of the affine-scaling primal algorithm. The explanation of the basic algorithm is based on [Arbel, 1993]. The basic algorithm is described along with the expanded algorithm in the second part to be the complete algorithm of IPLP used in this work. The

expanded algorithm in the second part comes from the addition of a section to the basic algorithm so that IPLP can find an exact solution and can recover an optimal basis.

7.3.1 Basic concept

Two major components of the affine-scaling primal algorithm are centering and projective gradient direction. Movement is made through projective gradient direction for maximizing the objective function or opposite to projective gradient direction for minimizing objective function. The projective gradient direction is used instead of gradient direction for the purpose of maintaining feasibility. Centering is performed to achieve the potential to improve objective function in each iteration.

The linear program (LP) using big-M method is used so that the unity vector, [1 1 ... 1], can be used as the starting solution [Arbel, 1993]. This LP has one additional variable. If this additional variable is driven to zero at the end of the algorithm, the primal problem is feasible. Otherwise, the primal problem is infeasible.

Three quantities, duality gap, primal feasibility, and dual feasibility, are used as the stopping criteria for terminating the basic algorithm. These quantities are defined in (7.1), (7.2), and (7.3) ([Arbel, 1993]). Note that A', c', and x' are the modification of the original A, c, and x because the big-M method is used [Arbel, 1993]. y and z are defined in (7.6) and (7.7) respectively. Note that x' is $(n+1)$-component column vector of variables. c'^T is $(n+1)$-component row vector of cost coefficients. c'^T signifies the transpose of vector c'. A' is $m \times (n+1)$ matrix of technological coefficients. b is m-component column right hand side vector. If all three criteria are met simultaneously, the basic algorithm is terminated. In other words, the solution found is very close to the optimal solution. This type of solution is called ε-optimal solution. Although dual feasibility is desired in terminating the algorithm, sometimes it cannot be achieved. For the algorithm used in this work, the dual feasibility-stopping criterion is neglected and the algorithm still works quite well with test problems.

$$duality\ gap = \frac{norm(c'^T x' - b^T y)}{1 + norm(c'^T x')} \tag{7.1}$$

$$primal\ feasibility = \frac{norm(b - A'x')}{1 + norm(b)} \tag{7.2}$$

$$dual\ feasibility = \frac{c' - A'^T y - z}{1 + norm(c')} \tag{7.3}$$

7.3.2 Extended algorithm

The extended algorithm for IPLP, affine-scaling primal algorithm, is described in Table 7.1. The left column is step number. The right column is the algorithm. Note that *(iter)* indicates the iteration number that the variable's value belongs to. Step 0 to step 4 of the algorithm is based on Arbel [Arbel, 1993], and step 5 to step 7 of the algorithm is developed by the author.

At step 4, α is the maximum allowable step size that maintains feasibility. α is defined in (7.4). Changing by step size α will make at least one variable hit the boundary of the feasible region. Thus, a factor ρ is used to make the new solution remain inside the feasible region. The algorithm uses ρ as 0.95 for the results presented in this work.

$$\alpha = \min\left\{\frac{-x_i'(iter)}{dx_i'(iter)} : \forall dx_i'(iter) < 0,\ 1 \le i \le n+1\right\} \tag{7.4}$$

The extended algorithm is expanded from the basic algorithm so that the algorithm can find the exact optimal vertex. Not only can this extended algorithm find the exact solution, but sensitivity analysis can also be performed after the optimal basis is found. The algorithm is composed of two parts: the basic IPLP algorithm and the movement from the interior solution to the vertex solution.

The basic IPLP algorithm is terminated when the stopping criteria, duality gap and primal feasibility, are small enough, usually in the range of 1e-6 to 1e-8 [Arbel, 1993]. The value of the stopping criteria is denoted as ε_1 in this work. If ε_1 is set too small, numerical instability might occur. The authors handle this problem by adding an additional stopping criterion. A quantity, z (defined in (7.7)) is calculated at every iteration and z is the estimate of the reduced cost coefficient vector. When the current solution is very close to the optimal vertex, the components of z, which belong to the basic variables of the optimal vertex, are very close to zero. Thus, the additional stopping criterion is to measure z and check to see if all the components of z that belong to the basic variables are less than a value denoted as ε_2. In addition, the algorithm must verify that the number of components of z which are less than ε_2 is equal to the number of constraints because the number of basic variables is equal to the number of constraints. If this is not the case, multiple (primal) optima of the auction problem are indicated. The value of ε_2 is set as 1e-6 for the extended algorithm. By adding this criteria, we can use a bigger value of ε_1 to avoid the numerical instability problem. Thus, the value of ε_1 is set to 1e-4, which is bigger than the suggested value, 1e-6 to 1e-8 in [Arbel, 1993].

The parameters ε_1 and ε_2 are important criteria for terminating the basic IPLP algorithm in step 5. The values of these two parameters need to be set properly so that the algorithm can find the solution. The procedure for changing these two parameters is explained in step 6.

At step 6, ε_1 and ε_2 are repeatedly reduced to be one-tenth if the Karush-Kuhn-Tucker (KKT) conditions are still not satisfied. Actually this situation is unlikely because the original values of ε_1 and ε_2 (1e-4 and 1e-6 respectively) are reasonable for most applications. These values have been tested with many examples and the test shows that these values can be used as criteria for terminating the algorithm's interior point process (step 0 to step 4) to find the exact solution at step 7.

Table 7.1 Augmented algorithm

0	Initialize iteration counter, *iter*=0. Initialize ε_1 and ε_2 as 1e-4 and 1e-6, respectively. Initialize the starting solution vector, $x'(iter)=[1\ 1\ \ldots\ 1]^T$.
1	Increment the iteration counter, *iter*=*iter*+1. Define the scaling matrix $D(iter)$ by $$D(iter)=diag(\ [x'_1(iter)\ \ x'_2(iter)\ \ldots\ \ x'_{n+1}(iter)]\ ) \quad (7.5)$$ where $diag(x')$ means diagonal matrix of vector x' and $x_i(iter)$ is the ith component of the present $x'(iter)$.
2	Calculate the dual estimate, $y(iter)$, where $y(iter)$ is an m-component column vector, by solving $$[A'D^2(iter)A'^T][y(iter)]=[A'D^2(iter)c'] \quad (7.6)$$
3	Find the estimate of the reduced cost vector, $z(iter)$, and then use it to find the primal step direction vector, $dx'(iter)$, where $z(iter)$ and $dx'(iter)$ are $n+1$ component column vectors, by $$z(iter)=c'-A'^T y(iter) \quad (7.7)$$ $$dx'(iter)=-D^2(iter)z(iter) \quad (7.8)$$
4	Update the solution vector by $$x'(iter+1)=x'(iter)+\rho\alpha\, dx'(iter). \quad (7.9)$$
5	Test with two criteria. First criterion: duality gap and primal feasibility are less than ε_1. Second criterion: the number of components of z that are less than ε_2 are equal to the number of constraints. If both criteria are satisfied, go to step 6. Otherwise, go to step 1.
6	The expected optimal basic variables are the variables having z less than ε_2. Test the KKT conditions. If the KKT conditions are satisfied, then the optimal basic variables have been found, go to step 7. If not, go to step 5 and reduce ε_1 and ε_2 to be one-tenth of the value previously used in step 5.

Table 7.1 (continued)

7	Find the optimal solution from Equation (6). B is the optimal basis and x_B contains values of basic variables. $$x_B=B^{-1}b \quad (7.10)$$

At step 5, the number of components of z that are less than ε_2 might be greater than the number of constraints although these components of z belong to the optimal basic variables for IPLP (i.e., variables which are greater than zero). This might occur from 2 reasons. First, free variables exist in the problem and each free variable, x_i, is implemented as x_i^+-x_i^-, x_i^+ and x_i^- are non-negative. The problem occurs because both of x_i^+ and x_i^- are greater than zero for the interior-point solution while either each of x_i^+ and x_i^- is greater than zero and the other must be zero for the simplex solution. Second, there are multiple optima and IPLP reaches the optimal solution that is not on a vertex. The number of basic variables must be equal to the number of constraints to use (7.10).

These two causes are handled as follows: For each of free variable, x_i, only either each of x_i^+ or x_i^- with greater value ($max(x_i^+, x_i^-)$) is selected. For multiple optimal solutions, if p variables are selected at step 5, and there are m constraints, $p>m$, there are more than one possible optimal vertex. Some of these are feasible and some are infeasible. Trial and error is used to find one feasible optimal vertex. Trial and error might consume much time when the number of possible optimal vertices is large. However, this drawback does not happen when this algorithm of IPLP is applied to auction methods because we will use the following procedure to handle multiple optima instead of trial and error. The main concept is that the multiple optima cannot be used for auction methods. If one of the multiple optima is used, it would be *unfair* to the bidders who are not selected. Indeed, it would be hard to select a set of bidders without an *arbitrary allocation*. Thus, when the number of components of z that are less than ε_2 is greater than the number of constraints at step 5, the program will report that multiple optima occur. The basic variables having z less than ε_2 are reported, which will tell the possible bidders to be selected. The independent contract administrator can use some criteria to select the bidders. An example criterion is to select the bidders who submitted bids first.

The movement from the interior solution to the vertex solution can be performed just after the termination of the basic IPLP. Step 6 moves the solution point from the interior solution to the vertex solution. The estimated optimal basic variables are those variables satisfying the requirement that values of the reduced cost coefficients are zero. These estimated optimal basic variables must be verified with the KKT conditions for optimality. The KKT conditions are elegantly developed in Bazaraa et al. [Bazaraa, 1990], pages 221-227. If the KKT conditions are satisfied, the estimated optimal basic variables are correct and the optimal solution can be calculated as explained in step 7.

At step 7, values of non-basic variables are zero. The objective function value can be calculated by substituting the values of all the decision variables into the objective function. To avoid finding B^{-1}, LU or QR factorization can be used to solve (7.10).

The extended algorithm also can check for infeasibility, unboundedness, and multiple optima of primal problem. The solution is infeasible if the selected variables at step 5 contain the artificial variable added for the extended problem. The solution is unbounded if, for any iteration, all of the components of $dx'(iter)$ that are found at step 3 are greater than or equal to zero. There are multiple optima if the reduced cost coefficient of any of the non-basic variables, while testing with the KKT conditions at step 6, is calculated to be zero. Actually, multiple optima can be detected at step 5. If the number of components of z that are less than ε_2 is greater than the number of constraints, excluding the effect of free variables, indicates that multiple optima have occurred.

7.4 System data for implementing results

A six-bus system (based on [Wood, 1996]) is used to demonstrate the implementation of network constraints. It is shown in Figure 7.1. There are totally 11 lines. Note that that the names of the lines are specified in Figure 7.1. There are three GENCOs (GENCOs 1, 2, and 3) and three ESCOs (ESCOs 1, 2, and 3). GENCOs 1, 2, and 3 are at buses 1, 2, and 3 respectively and ESCOs 1, 2, and 3 are at buses 4, 5, and 6 respectively.

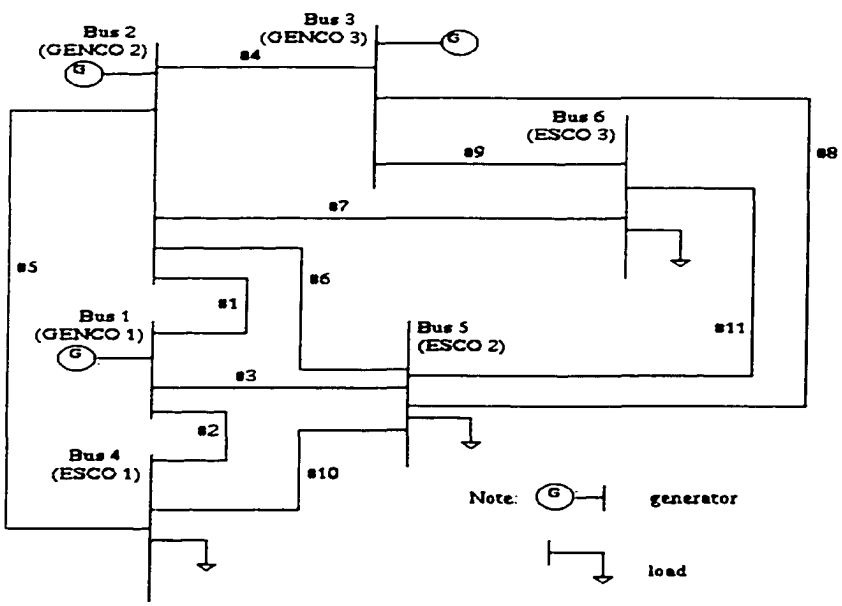

Figure 7.1 Six-bus system

The system data is listed in Tables 7.2 and 7.3. Table 7.2 shows bus data. V^0 is the original bus voltage (i.e., before trading). δ^0 is the original bus angle. P^0 is the original bus real power generation (for buses 1 to 3) and load (for bus 4 to 6). Q^0 is the original bus reactive power generation (for buses 1 to 3) and load (for buses 4 to 6). Table 7.3 shows line data for line resistance, line reactance, and half of the line charging admittance. P_{ij}^{max} is the flow limit of the line. The MW-base and voltage-base are 100MW and 230 kV, respectively.

Table 7.2 Bus data

Bus	V^0 (pu)	δ^0 (deg.)	P^0 (MW)	Q^0 (MW)
1	1.0500	0.00	112.62	34.79
2	1.0500	-2.53	140.00	75.07
3	1.0700	-5.15	60.00	112.34
4	0.9754	-4.68	100.00	70.00
5	0.9677	-6.58	100.00	70.00
6	0.9930	-7.27	100.00	70.00

Table 7.3 Line data

Line No.	From Bus	To Bus	r (pu)	X (pu)	$Y_p/2$ (pu)	P_{ij}^{max} (MW)
1	1	2	0.100	0.200	0.020	30.00
2	1	4	0.050	0.200	0.020	60.00
3	1	5	0.080	0.300	0.030	53.00
4	2	3	0.050	0.250	0.030	30.00
5	2	4	0.050	0.100	0.010	76.00
6	2	5	0.100	0.300	0.020	35.00
7	2	6	0.070	0.200	0.025	60.00
8	3	5	0.120	0.260	0.025	30.00
9	3	6	0.020	0.100	0.010	60.00
10	4	5	0.200	0.400	0.040	15.00
11	5	6	0.100	0.300	0.030	12.00

7.5 Results

This section presents the results of the extended IPLP algorithm applied to the six-bus system described in the previous section. The results are divided into two main parts. The first part illustrates the bid selection in an auction implemented with the method described in this chapter. The auction formulation used is based on

formulation (2.1) but the transmission usage cost is not included in the objective function. The second part illustrates the sensitivity analysis of bids' prices and lines' flow limits.

7.5.1 Accepted bids

Table 7.4 shows the submitted and accepted bids by GENCOs and ESCOs. GENCO 3 can sell all power offered for sale and ESCOs 1 and 2 can buy all power they bid on. GENCOs 1 and 2 and ESCO 3 can sell and buy only part of their desired power. GENCOs 1 and 2 offer the higher bids and ESCO 3 offers the lowest bids, but the auction results also depend on the network constraints. Sometimes even the GENCO that bids the lowest or the ESCO that offers the highest bid will have their contracts limited due to the network constraints.

The optimal surplus is $129.13. The flows on transmission line 5 (between buses 2 and 4) and line 9 (between buses 3 and 6) are at their limits. The shadow prices of lines 5 and 9 are 4.39 $/MW and 0.09 $/MW respectively. The shadow price in this context indicates the incremental improvement in the objective function of increasing flow limit of the associated transmission line. Note that the flows and the shadow prices of lines 5 and 9 that will be discussed through this work are based on flows in the direction from bus 2 to bus 4 (for line 5) and in the direction from bus 3 to bus 6 (for line 9).

An upper-bound linear programming (UBLP), simplex program (written by the authors) is used to implement the auctions to compare to IPLP. The CPU time that the UBLP uses to find the solution is 9.43 seconds while the IPLP uses only 0.80 seconds. The IPLP uses 8.63 fewer seconds than the UBLP even for this small problem. This shows IPLP to be very efficient.

Table 7.4 Base case's bids

Bids	GENCO 1	GENCO 2	GENCO 3	ESCO 1	ESCO 2	ESCO 3
Price ($/MWh)	9.70	8.80	7.00	12.00	10.50	9.50
Submitted amount (MW)	20.00	25.00	20.00	25.00	10.00	20.00
Accepted amount (MW)	5.30	20.71	20.00	25.00	10.00	10.29

7.5.2 Sensitivity analysis

7.5.2.1 Case A: increase in ESCO 3's bid price

From Table 7.4 (base case), only part of the desired power of ESCO 3 is accepted. Case A increases the bid price of ESCO 3 to 12.00. The new accepted bids are shown in Table 7.5. Comparing to the base case (Table 7.4), less of the bids of GENCO 1 and ESCO 1 are accepted and more of the bids of GENCO 2 and ESCO 3 are accepted. The bids of GENCO 3 and ESCO 2 do not change.

The optimal surplus is $154.89. The flows of transmission line 5 (between buses 2 and 4) and line 9 (between buses 3 and 6) are at the limits. The shadow prices of lines 5 and 9 are 5.75 $/MW and 6.37 $/MW respectively. These shadow prices are higher than those of the base case, especially the shadow price of line 9. This indicates that it is worthier to increase the flow limits of lines 5 and 9. In other words, the value of the objective function can be improved with the increase of the flow limits of lines 5 and 9 with these new bids' prices. Note that the shadow price of line 9 is higher than that of line 5 in this case while the shadow price of line 9 is lower than that of line 5 in the base case. This indicates that increasing the flow limit of line 9 can give greater benefit than increasing the flow limit of line 5 in this case.

Table 7.5 Case A's bids

Bids	GENCO 1	GENCO 2	GENCO 3	ESCO 1	ESCO 2	ESCO 3
Price ($/MWh)	9.70	8.80	7.00	12.00	10.50	12.00
Submitted amount (MW)	20.00	25.00	20.00	25.00	10.00	20.00
Accepted amount (MW)	0.00	23.84	20.00	22.77	10.00	10.54

7.5.2.2 Case B: increase in line 5's flow limit

The flows of lines 5 and 9 are at their limits for the base case. Case B increases the flow limit of line 5 from 76 MW to 80 MW. The accepted bids for this new case are shown in Table 7.6. Comparing to the base case (Table 7.4), less of the bids of GENCO 1 and ESCO 3 are accepted and more of the bid of GENCO 2 is accepted. The bids of GENCO 3 and ESCOs 1 and 2 do not change. The optimal surplus for case B is $135.06, which is bigger than the optimal surplus of the base case, $129.13. This shows the benefit of increase in flow limit of line 5.

No lines are operating at their limits. The spare capacities of lines 5 and 9 are 2.64 MW and 0.62 MW respectively. This fact shows that it is not beneficial to further increase flow limit of line 5 with these bids.

The result indicates the benefit associated with expanding the flow limit of line 5, and thus is useful for transmission network expansion. The same procedure as was used in case B can be performed on line 9. Simulation of the procedure in case B on various bidding scenarios can be used to make decisions of transmission network expansion.

Table 7.6 Case B's bids

Bids	GENCO 1	GENCO 2	GENCO 3	ESCO 1	ESCO 2	ESCO 3
Price ($/MWh)	9.70	8.80	7.00	12.00	10.50	9.50
Submitted amount (MW)	20.00	25.00	20.00	25.00	10.00	20.00
Accepted amount (MW)	0.00	25.00	20.00	25.00	10.00	10.29

7.6 Chapter conclusions

This chapter applies IPLP to auction methods. An extended algorithm of IPLP is developed and used. This extended IPLP algorithm can find the exact optimal solution (i.e., exact optimal vertex) and can recover the optimal basis. The concept used in this extended algorithm is simple. The results show that IPLP is very efficient. The results of sensitivity analysis are very useful for adjusting the bid's price to get a greater quantity to be accepted. In addition, the results of sensitivity analysis are useful for transmission network expansion.

The comparison with UBLP could be extended to investigate the linking of buyers with sellers. If the market rules require the identification of buyers and seller uniquely, then the IPLP method must be extended to include matching of buyers and sellers. This is not in the scope of this work but it is an interesting topic for future research.

8 MARKET POWER AND MARKET REACH

8.1 Chapter overview

One of the most important tasks for the ICA in the deregulated market is to limit the market power held by the participants. To achieve this goal, there must be methods for measuring market power. There are several indices available for measuring market power. Each of the indices has its own advantages and disadvantages. This work discusses the applicability of these indices to the deregulated electric power market. The modified Lerner index is calculated based on prices, which are the major parameter in the price-based market, and thus superior to other indices.

Market reach is closely related to market power. Firms with market power quite probably will have higher market reach. This work explores how to measure market reach and how firms may enhance their market reach. This work also determines how firms having branch-offices in multiple locations can utilize this advantage to enhance their market reach. Although the explanation of market reach is presented from the viewpoint of firms (i.e., GENCOs and ESCOs), it can be employed by the ICA to analyze the market reach of firms in the market.

8.2 Introduction

The goal of a firm is to maximize its profit subject to constraints. There are two major types of constraints—production constraints and non-production constraints. Production constraints include input supply limit, input capability, etc. For electricity, production constraints are comprised of fuel supply limit, generator's capability (e.g., minimum up- and down-time), crew constraints, and other constraints depending on generating unit types. Non-production constraints could be in various forms depending on products and market rules. Transmission network constraints are the important non-production constraints that play a major role for electricity. Transmission network constraints are comprised of operational and security constraints. Security constraints are composed of reliability, voltage stability, and transient stability constraints. Thermal limits for transmission lines, voltage limits for electrical buses, and power flow constraints are examples of transmission network constraints.

Market reach study is to determine how a firm can get additional high-profit customers. The firm may earn more profit from these customers either in short-term or in long-term. The firm may consider losing profit in short-term to gain profit in long-term, or the firm may consider losing some current customers to gain additional high-profit customers. This is acceptable as long as the firm can increase its total profit. In the electricity market, firms include generation companies (GENCOs) and energy services companies (ESCOs). ESCOs emerge in the deregulated market structure as the sole source of electricity to the consumer. In addition, ESCOs can sell or buy electricity to or from GENCOs. In the traditional regulated paradigm, GENCOs supply electricity to consumers following regulations specified by the regulatory commission. In the deregulated

competitive market, GENCOs and ESCOs can freely select the customers they desire. The term that will be used commonly to represent both GENCO and ESCO hereafter will be "the firm".

There are factors that will limit the capability of freely selecting customers. Electricity prices in different areas are different because different inputs and production processes are used by local firms and different factors are encountered on local firms. This causes difficulty for the firm with higher cost to compete with the local firm or other firms with lower cost. This problem is more pronounced when transmission cost (i.e., transportation cost in other products) is taken into account. Transmission cost could limit the competition capability of the more distanced firm to the local firm or even a nearby firm. Even the firm with lower cost might have difficulty competing with the local firm or other firms with higher cost when the effect of the transmission cost is considered. Moreover, transmission network constraints could segment market in the way that firms in one area cannot compete with other firms in other areas. Another important factor that affects competition is market power.

Market power is the ability of a firm or a group of firms to control market in favor of the firms. Firms that have market power do not lose all customers when the firms increase the prices. The firms having market power have advantages over other firms in market reach capability. The firms having market power can utilize this advantage to enhance their ability to get customers. It is evident that the study of market power is useful for the study of market reach. Thus, the study will begin with market power study and then follow with a market reach study.

The theme of this work is to explore the suitable index to be used for market power measurement. This work determine how generation companies (GENCOs) or energy services companies (ESCOs) can acquire additional customers or additional transactions, given the auction results. In addition, this work is to determine how GENCOs or ESCOs can utilize their market power (if they have any) to enhance their chances of success. In the explanation, GENCOs are assumed to be sellers and ESCOs are assumed to be buyers. The explanations of market power and market reach are based on GENCOs and they can be similarly applied to the ESCOs.

Section 8.3 summarized review of the related work. Section 8.4 explains the indices used in measuring market power. Section 8.5 discusses how to measure market reach. Section 8.6 presents methods for market reach enhancement. Section 8.7 describes how a firm with multiple locations enhances its market reach. Section 8.8 is the conclusions of this chapter.

8.3 Review of related work

Market concentration and several interesting issues about industrial organization were investigated in [Shy, 1996]. The Herfindahl-Hirshman index (HHI) was also discussed in [Shy, 1996]. [Lerner, 1934] explained how to measure monopoly power by using Lerner index. The gradient index was developed to measure the rate of potential improvement in the welfare performance of a market. Department of Justice and Federal Trade Commission issued guidelines for horizontal mergers [Department of Justice, 1997]. "The unifying theme of the

Guidelines is that mergers should not be permitted to create or enhance market power or to facilitate its exercise" [Department of Justice, 1997]. [Perl, 1996] examined two major approaches used to measure market power in the electric power market, the traditional approach (HHI) and simulation approach. The HHI approach was likely to overstate the degree of market power while the simulation approach may provide more accurate and more useful market power measurement [Perl, 1996]. Spatial price equilibria were calculated to estimate the degree of market power that can be generated by the GENCOs in the deregulation of electric power generation [Hobbs, 1985]. The problem was formulated in network-based linear programming and two types of equilibria, Bertrand and limit pricing equilibria, were calculated [Hobbs, 1985]. [Werden, 1996] described several important issues of market power in electric power market, e.g., defining pertinent markets and geographic dimensions, specifying market shares for calculating market power, market power mitigation. [Oren, 1997] demonstrated that in a congested electricity network, incorporating active transmission right trading (in parallel to a competitive energy market) could remove the price distortion and inefficient dispatch associated with passive transmission rights. [Hogan, 1997] used a model of imperfect competition with strategic interactions in electricity transmission networks to illustrate the exercise of market power by GENCOs. [Alvarado, 1998] showed examples to demonstrate how HHI in each location changes in different network congestion conditions and to illustrate strategic behavior of GENCOs.

8.4 Market power indices

Deregulation of electricity market breaks up the vertically integrated monopoly and this in turn reduces the firm's market power. However, market power still exists in horizontal market. Market concentration can lead to market power because market concentration results in easier coordination when there is no product differentiation among the firms. This is quite true for electricity because of its homogeneous nature. The procedure for auctioning electricity in different levels of availability and EES has been presented in previous chapter. The differentiation of electricity provides not only flexibility for traders, but can also help reduce market power. The general case for market concentration is when there are a few large firms and these firms have large market shares in the market. In addition, a congested transmission network can segment the market and lead to market power even when the market is not concentrated. This is because the firms in some strategic locations can manipulate transactions to beneficially create market power for themselves. The firms, who provide critical ancillary services, e.g., reactive power for maintaining system voltages also have market power.

This section focuses on market concentration. The number of GENCOs and market share of GENCOs determine market concentration in electricity market. The indexes used to measure market concentration are described as follows. Note that these indices indicate potential market power but not necessarily mean that market power exists.

8.4.1 The four-firm concentration ratio (I_4)

This index is a linear summation of the market share of the four largest GENCOs in the market. A large index indicates that most of the sales are by the four largest GENCOs. This leads to market power of the four largest GENCOs because the four largest GENCOs can control the sales and, consequently, affect prices. The equation for the four-firm concentration ratio is shown in (8.1). Market share is denoted by s_i and the formula is shown in (8.2). The output power of GENCO i and the total output of all GENCOs are denoted by q_i and Q, respectively. Note that the market share and the four-firm concentration ratio are in percent unit. Because the summation is linear, this index cannot differentiate between each GENCO's market share provided that the summation is the same. For example, suppose the market is such that the four largest firms each has 15% of the market share, then the market has a four-firm concentration ratio of 60%, which is the same a market having four largest firms with market shares 57%, 1%, 1%, 1%. This gives rise to problems in measuring market power because the latter market actually has more market power than the former market. A detailed discussion can be found in [Shy, 1996].

$$I_4 = \sum_{i=1}^{4} s_i \tag{8.1}$$

$$s_i = 100 * q_i / Q \tag{8.2}$$

A more generalized form of the four-firm concentration ratio is m-firm concentration ratio, where m is the number of the largest GENCOs in the market used to calculate the index. The number of the largest GENCOs needed to make the index indicate the right concentration level of the market is questionable. In addition, the number of largest GENCOs needed depends upon the market and varies according to time even within the same market. For example, if there are five large GENCOs having similar sizes in the market now, the four-firm concentration ratio cannot be used and it may be necessary to use five GENCOs to calculate the index instead. This is because the index calculated from only four largest firms possibly indicates lower market power than it should be. Talking this further, if another firm with similar size to those five largest firms enters the market, the five-firm concentration ratio can no longer be used and six GENCOs may be needed to calculate the index due to the similar reason.

8.4.2 The Herfindahl-Hirshman index (HHI)

This index is the convex summation of all firm market shares. The equation for HHI is shown in (8.3). Because the summation is convex, HHI can distinguish between the effect of unequal market share among GENCOs even though the linear summation is the same. Thus, HHI can solve the problem with the four-firm concentration ratio. This is why HHI is used more widely than the four-firm concentration ratio in measuring market concentration. Note that one problem of HHI is that the data of all GENCOs is not known. This

problem is also found in m-firm concentration ratio. This will definitely be the case when new generating units are installed after the deregulation. A detailed discussion can be found in [Shy, 1996].

$$HHI = \sum_{i=1}^{N} (s_i)^2 \tag{8.3}$$

8.4.3 Lerner index and modified Lerner index

The other related index is the Lerner index [Lerner, 1934], which is the index for measuring the market power of a monopoly by determining the percentage that the price deviates from the marginal cost. The Lerner index is symbolized by ϕ and the formula is shown in (8.4). Price in the market is denoted by P and marginal cost is denoted by MC. The Lerner index can be generalized to measure market power of an oligopoly and of GENCOs in a market with multi-GENCOs and multi-ESCOs, which is the case for the deregulated market. In this case, the index, ϕ^{mod} is the ratio of the difference of the price in the market and the competitive price to the price in the market and the index is shown in (8.5). Price in the market is denoted by P and the competitive price is denoted by P^*.

$$\phi=(P-MC)/P \tag{8.4}$$

$$\phi^{mod}=(P-P^*)/P \tag{8.5}$$

The calculation of the modified Lerner index is based on the price. Firms that have market power are able to keep the price high voluntarily without really colluding. Prices are the direct effect from market power. This is why prices can be well used to calculate the market power index. Giving the pricing structure in chapter 3, the prices (P) and competitive price (P^*) in different buses are different, which results in different modified Lerner indices in different buses. Competitive prices need to be calculated from optimal power flow problem. The objective function is the difference of the total revenue of every ESCO and the total cost of every GENCO and the objective function is maximized. This could take a great amount of computational effort to calculate the modified Lerner index because optimal power flow (OPF) problem is nonlinear and it is difficult to trace the power being sold from whom to whom. In addition, it would be unnecessary for such calculation because single modified Lerner index is preferred.

Because the modified Lerner index is calculated in real-time (every time the auction is held), a single simplified index should be used. This simplified modified Lerner index is calculated based on the system marginal price. For auction problems, the system marginal price is the price at the intersection of the aggregate seller offer and the aggregate buyer bid, taking the constraints into account. For the optimal power flow

problem, the system marginal price is the price at the intersection of the aggregate marginal cost of sellers and marginal revenue of buyers, taking the constraints into account. The marginal price of the auction problem is used for P and the marginal price of the OPF problem is used for P^* in calculating the modified Lerner index. The concept of marginal price was illustrated in previous research [Dekrajangpetch, 1997].

Note that the Modified Lerner indices fall into two classifications. The first case is when the market price is higher than the competitive price. In this case, the modified Lerner index is positive and is between 0 and 1. High values (i.e., close to 1) indicate the possibility that some of the GENCOs have potential market power. Low values indicate that market participants hold little potential market power in the system.

The second case is when the market price is lower than the competitive price, the modified Lerner index is negative. The lowest possible magnitude is 0 and its magnitude can be higher than 1. The high magnitude indicates the possibility that some of the ESCOs have potential market power. The low value indicates that there is no potential market power in the system.

Although a single modified Lerner index is used, the value considers the combined effects of every party in the system, i.e., all GENCOs, ESCOs, and TRANSCOs. As mentioned above, the modified Lerner index should be calculated in every auction period. The ICA needs to analyze the auction information from certain periods to come up with a conclusion regarding market power.

Calculating the modified Lerner index can be shown with an example. The same example that was used in chapter 3 is used here. The same four-bus power system as shown in Figure 3.1 is used, which has the system data as shown in Table 3.1. The same submitted bids as shown in Table 3.2 is used. There are three bidders, two GENCOs and one ESCO in the system. Table 8.1 shows GENCOs' cost data and ESCOs' revenue data. The cost and revenue functions are assumed to be quadratic functions. Table 8.2 describes the existing generation and load before bidding and the marginal and average costs and revenues. Table 8.3 gives the market price, the competitive price, and the modified Lerner index. The modified Lerner index is calculated from (8.5). Note that the modified Lerner index is low and this could suggest that there is no potential market power in the market. However, as described above, the ICA needs to calculate the modified Lerner indices in other periods to come up with the conclusion regarding market power.

Table 8.1 Cost functions of the GENCOs and revenue function of the ESCO

Firms	Quadratic Coefficient	Linear Coefficient	Constant Term	Minimum Capacity (MW)	Maximum Capacity (MW)
GENCO 1	0.0200	5.0	70	30	250
GENCO 2	0.0350	5.5	40	20	180
ESCO 1	-0.0043	12.0	150	20	380

Table 8.2 Average costs and average revenue

Firms	Power before Auction (MW)	Submitted Bid Amount (MW)	Marginal Cost/ Revenue ($/MWh)	Average Cost/ Revenue ($/MWh)
GENCO 1	65.00	10.00	7.60	7.38
GENCO 2	35.23	15.00	7.97	7.87
ESCO 1	100.00	20.00	11.14	13.07

Table 8.3 Modified Lerner index

Market Prices ($/MWh)	Competitive Price ($/MWh)	Modified Lerner Index
9.00	8.63	0.0422

8.4.4 Comparisons among the indices

The m-firm concentration ratio and the HHI indices are calculated based on concentration ratio or market share while the modified Lerner index is calculated based on the price. High concentration does not always mean that market power exists. The output or the capacity that is used to calculate the concentration ratio is not the direct measure of the customer welfare. The HHI approach is likely to overstate the degree of market power [Perl, 1996]. Because of these reasons, the modified Lerner index seems better because it does not possess these properties. Calculating an index by price is better than calculating by concentration ratio in the sense that the price is of direct concern to the customers. If a detailed analysis is needed, the simulation approach could be used along with the modified Lerner index. The simulation approach is illustrated in [Perl, 1996].

There are plenty of controversial issues to consider when calculating market share. One of them is that the output of a GENCO changes over time. For example, the output might be high during peak periods and low during off-peak periods. In addition, the output of a GENCO changes with the condition of the network. The output at the same period of day may vary widely from day to day. This is because the network conditions might favor one GENCO on a given day but might favor another GENCO a different day. This variance in output helps us to see that market power is dynamic. A GENCO that has market power one period might not have market power the next period. This supports a concentration measure that is calculated dynamically. The same arguments may be applied to the calculation of the modified Lerner index because prices also vary upon periods.

Note that the m-firm concentration ratio, the HHI, and the Lerner indices can be considered special cases of the gradient index and can be acquired by simple transformations on the gradient index. The gradient index is calculated for measuring the rate of potential improvement in the welfare performance of a market. Its value is sensitive to the behavior of the GENCOs in the market. The details of the gradient index calculation are described in [Dansby, 1979].

8.5 Measuring market reach

Market reach measure suggests to which ESCOs a GENCO can sell power, and with which of these ESCOs the GENCO should pair to make higher profit. Market reach is related to and complements to the concept of market power and acts like a complement to market power. GENCOs that have high market power have high market reach. GENCOs with market power have an advantage in reaching the customers they desire. Knowing their market reach allows GENCOs to make intelligent decisions, which help them maximize their profit. Market reach can be determined by investigating past results, by calculating the transferred marginal benefits (TMB), or by performing a sensitivity analysis of bid prices to find the potential market reach. The meanings of these terms are explained separately in the sections describing the methods below.

8.5.1 Past result investigation

By investigating auction results, GENCOs can determine to which ESCOs they can sell power. For example, one bidding scenario is that in the past GENCO 1 increased the bid price and the bid amount accepted was more. As a result of GENCO 1's increased bid price, GENCO 2 sells less power; ESCO 1 buys more power; and the other GENCOs' and ESCOs' accepted bids remain at the same amount. This result implies that GENCO 1 can sell more power to ESCO 1 and GENCO 2 can sell less power to ESCO 1 due to an increased bid price of GENCO 1.

The investigation and analysis must be performed very carefully because there are many factors that can affect results. Let us modify the above example so that this time not only GENCO 1 increases the price, but other GENCOs might also change the bid prices and amount, and so do the ESCOs. This time the result is affected by the changes of every bidder, not only by GENCO 1. This prevents us from drawing our former conclusions. In addition, it is difficult to conclude which ESCOs each GENCO will reach when the results of more than bidder change. This is because it is difficult to distinguish the path of each of the power injections on the network. Investigation of past results is useful for giving us an idea about the market reach; however, it does not always yield any specific conclusions because of the disadvantages just described.

8.5.2 Transferred marginal benefit (TMB) calculation

Another approach is to calculate the marginal benefit of each ESCO with respect to the location of a GENCO. In other words, the marginal benefit of each ESCO is transformed such that the value at the location of a GENCO is known. The concept is to calculate the amount of power that a GENCO has to offer to each ESCO, given the load at each ESCO, and given that the remaining GENCOs and ESCOs are inactive. The first step is to estimate the marginal benefit of the ESCO, which can be estimated from the past submitted bids of the ESCO.

If the market rule is that ESCOs pay for the transmission usage, losses, and other associated costs, the estimated marginal benefit includes the effect of the these costs. In this case, GENCOs could try to estimate the associated cost and subtract it from the predicted marginal benefit. However, since the estimated TMBs are

only approximate for the sensitivity analysis, it would be unnecessary to spend the effort in estimating the associated costs. The predicted marginal benefit could be used as the TMB by realizing that it already includes the associated costs.

If the market rule is that GENCOs pay for the transmission usage, losses, and other associated costs, the estimated marginal benefit does not include the effect of these costs. By the same token, GENCOs could try to estimate the associated cost and add it to the predicted marginal benefit. However, as explained above, the estimated TMBs are only approximate for the sensitivity analysis, it would be unnecessary to spend the effort in estimating the associated costs. The predicted marginal benefit could be used as the TMB by realizing that it does not include the associated costs. If the effect of the transmission usage cost and loss cost is desired to be included, the transmission cost and the transmission losses could be calculated by performing power flow analysis. The calculated transmission usage cost (ΔTRC) and loss cost (ΔLC) can be incorporated to the predicted marginal benefit (MB) as (8.6). Other associated costs can be included in TMB in the same manner. Note that the load of the ESCO plus loss is represented by ΔP.

$$TMB = MB + (\Delta TRC + \Delta LC) / \Delta P \tag{8.6}$$

The TMB can be used to infer the market reach in the sense that it tells the GENCO the lowest price to bid (assuming that the associated costs are incorporated). If the TMB of an ESCO is lower than the present average cost of the GENCO, it indicates that the GENCO cannot reach this ESCO. Otherwise, the GENCO does have a chance to reach this ESCO. This TMB is important information for bid pricing in the next cycle or period. The bid price for the next cycle or period can be equal to the TMB or a little bit lower. However, this bid price might not be accepted because other GENCOs might bid lower and get their bids accepted instead. To develop a suitable bid price, the TMBs of the same ESCO at other GENCOs' locations are needed. The same method is used to find TMBs at other GENCOs' locations.

The additional great benefit from determining TMBs of an ESCO at all GENCOs' locations is able to determine dynamic market power of all GENCOs to the interesting ESCO. TMBs of all GENCOs are considered together and together with the average costs of all GENCOs complete the analysis. The analysis can tell which GENCO has advantage for the amount of changed load of the ESCO under consideration. The concept is that the GENCOs with lower average costs and higher TMBs have higher market power. Note that the TMBs of all GENCOs may not be needed because not all GENCOs can affect the bid acceptance. The GENCOs unable to affect acceptance could be the GENCOs that are located very far from the interesting ESCO or those that have more expensive costs. Trimming these GENCOs from the analysis will help speed up the analysis without loss of accuracy.

This approach can be performed for any individual ESCO that is of interest to GENCOs. The resulted TMBs are calculated under the assumption that other GENCOs and other ESCOs will not change their power. If

they change their power, the result will be affected. Although other GENCOs might change their power, the resulted TMBs can give the big picture of how GENCOs can affect each other and which GENCO has a greater advantage. The effect of changing other ESCOs should be included in the analysis. It can be done by estimating the reaction function of the ESCOs. However, this may result in a complex problem and could make the calculation slower. This indicates the major drawback of this method when a specific result is needed. I suggest neglecting the effect other ESCOs changes and combining the result with the sensitivity analysis.

8.5.3 Sensitivity Analysis to determine potential market reach

Many parameters can be tested with sensitivity analysis to determine how to increase the market reach. These procedures will be explained in the next section. Before studying how to increase market reach, GENCOs should study how much market reach GENCOs potentially have. This section explains how to determine the potential market reach, which is defined as the ability to reach customers when the submitted bid price is at the average cost, given that other bids do not change. The potential market reach is an indication of the best market reach that a GENCO can achieve, all other things remaining constant. The potential market reach is measured by to which ESCOs the GENCO can sell power and how much power the GENCO can sell power to each of these ESCOs. For an example, a GENCO conducts the study and finds that if this GENCO submits at its average cost, this GENCO can sell power to ESCO 1 for 5MW and to ESCO 2 for 10 MW. The potential market reach of this GENCO is selling 5 MW to ESCO 1 and selling 10 MW to ESCO 2.

The key input is the optimal basis, which is required for performing a sensitivity analysis to determine potential market reach and how to raise the market reach. The optimal basis is assumed to be able to estimate from the transmission network information from the open-access same-time information system (OASIS) and the accepted bids of all bidders (assumed to be published). The past published cost functions of generating units are an excellent source of information in estimating other unaccepted GENCO bids because the bus injections are known. The estimation of the optimal basis is not in the scope of this work.

In this work, potential market reach is determined based on that the submitted bid price of a GENCO is its average cost. Average cost is utilized here instead of marginal cost to ensure that GENCOs can recover their fixed costs in bidding. Marginal cost could be used in some occasions, e.g. when fixed costs are recovered with other bids, and especially when the marginal cost is higher than the average cost.

The potential market reach can tell a GENCO about its ability to best reach ESCOs. In other words, it will tell a GENCO which ESCOs would buy power from the GENCO if the GENCO bids its average price. Note that the potential ability in this context is based on the submitted bid price. There are other factors that the GENCO might be able to change to achieve a better result. However, the focus on the price because it is the main parameter used for bidding. In addition, the potential ability in this context assumes that other bidders do nothing to affect the bidding results. Other bidders might enhance the GENCO's chances of bid acceptance. However, this is not necessarily considered for calculating the potential market reach because of the uncertainty involved. Note that the potential market reach is dynamic because it depends on the based condition.

The procedure described here for determining the potential market reach is based on the sensitivity analysis of the cost coefficient. Note that the submitted amount must exceed the new accepted amount to ascertain that the potential market reach is not restricted by inadequate supply offer. If the submitted amount is entirely accepted, it indicates that better result might be achievable if an additional amount is submitted. Thus, to determine the potential market reach, the submitted amount is increased until the bid is not entirely accepted. The algorithm for determining the potential market reach is summarized below.

Step 1: Perform sensitivity analysis on the submitted bid price to determine how the accepted bid changes when the submitted price of the GENCO is equal to its average cost.

Step 2: Does the new accepted amount equal the submitted amount. If yes, go to step 3. Otherwise, stop; the changes in accepted amount of the GENCO and all ESCOs indicate the potential market reach.

Step 3: Increase the submitted amount and repeat step 1 to continue the sensitivity analysis.

If the new accepted bid amount does not change from the base case, the potential market reach is the same as that is determined from the base result. Changing the bid price to average cost does not improve the market reach. After the potential market reach is determined, the market reach can be studied further. The effect of other bidders' changes can be directly incorporated into the sensitivity analysis. Incorporating these effects tells us the potential market reach including the effect of other bidder's changes.

Comparing the three methods for measuring market reach, sensitivity analysis can give a more specific result for the market reach analysis than past result investigation and the TMB calculation. However, it does not give us a handle on the big market reach picture. Past result investigation and the TMB calculation are superior to sensitivity analysis in the context of giving the big picture but they are inferior in the context of providing specific information. The sensitivity analysis results, combined with the past result investigation and the TMB calculation, can enhance one's ability to accurately determine the market reach. As suggested above, the TMB of an ESCO is calculated without incorporating the effect of ESCOs' changes. This is reasonable because the TMB will be used as information to the sensitivity analysis. The specific effect of changes of other ESCOs can be incorporated directly in the sensitivity analysis.

8.6 Enhancement of market reach

After a participant's market reach is known, participant may wish to enhance his market reach. In the short-run, this can be done by adjusting the bidding parameters. In the long-run, GENCOs in the areas in which deregulation has not implemented can install equipment e.g., a phase-shifter transformer and/or build new transmission lines to increase their market reach. This section uses sensitivity analysis to illustrate how to change parameters to enhance market reach. As explained in the previous section, the analysis assumes that the optimal basis can be estimated. This section illustrates the case when a GENCO owns generating units in only one location. Sensitivity analysis on submitted bids for the case when a GENCO owns generating units in multiple locations is illustrated in the next section. The notation of the symbols used is:

k	index of the GENCO that performs sensitivity analysis
Δc_k	change in the submitted bid price of GENCO k
c_k^{old}	GENCO k's submitted bid price for the base case
c_k^{new}	GENCO k's submitted bid price after sensitivity analysis is performed ($c_k^{new} = c_k^{old} + \Delta c_k$)
ΔB_{sk}	change in the submitted bid amount of GENCO k
B_{sk}^{old}	GENCO k's submitted bid amount for the base case
B_{sk}^{new}	GENCO k's submitted bid amount after sensitivity analysis is performed ($B_{sk}^{new} = B_{sk}^{old} + \Delta B_{sk}$)
ΔP_{sk}^{old}	accepted amount of GENCO k's power for the base case (when GENCO k owns a single generating unit)
$\Delta P_{sk,l}^{old}$	accepted power amount of unit j of GENCO k for the base case (when GENCO k owns multiple generating units)
ΔP_{sk}^{new}	accepted amount of GENCO k's power after sensitivity analysis is performed
RCC_k^{old}	GENCO k's optimal RCC for the base case
RCC_k^{new}	GENCO k's optimal RCC after sensitivity analysis is performed
M	optimal basis matrix
$M_{i,j}^{-1}$	the element at the ith row and the jth column of the inverse of the optimal basis matrix M
y_j	a vector representing $M^{-1} * a_j$, where a_j denotes the jth column of the technological matrix
y_{lj}	the lth component of y_j

8.6.1 Change in submitted bid amount (ΔB_{sk})

Two major bid elements are amounts and prices. This section explains the sensitivity analysis on the submitted bid amount. This process utilizes sensitivity analysis on the RHS. The formula for calculating the new accepted bid amount of GENCO k is shown in (8.7), assuming other quantities are constant. The ith row and jth column are assumed to be the associated indices in calculation; i.e., the accepted bid amount of GENCO k is at the order of ith row and the submitted bid amount of GENCO k is at the jth row. This process does not change the RCC and thus the only possible violation of the optimal conditions is that the some elements of the new solution become negative. If this happens, the dual simplex method is used to pivot to get the new optimum. Thus, although only (8.7) is shown for ΔP_{sk}^{new}; other optimal basic variables are needed to be calculated to ascertain that they are still nonnegative.

$$\Delta P_{sk}^{new} = \Delta P_{sk}^{old} + M_{i,j}^{-1} * \Delta B_{sk} \tag{8.7}$$

In (8.7), a positive (negative) value of $M_{i,j}^{-1}$ indicates that increased submitted bid amount increases (decreases) the accepted bid amount. If the values of $M_{i,j}^{-1}$ are zero, increased submitted bid amount does not affect the accepted bid amount. This can aid in deciding whether to increase the bid amount. Sensitivity

analysis on submitted bid amount is useful when the submitted amount is entirely accepted. Otherwise, sensitivity analysis should be performed on the submitted bid price. An algorithm for integrating sensitivity analysis on submitted bid amount and the sensitivity analysis on submitted bid price together is shown in next section.

8.6.2 Change in submitted bid price (Δc_k)

This section explains sensitivity analysis on the other major bid element, the submitted bid price. This process utilizes sensitivity analysis on the cost coefficients. The submitted price of GENCO k is changed by an amount of Δc_k. This section can be divided into two cases: (1) the submitted bid was not accepted and (2) the submitted bid was partly accepted. If the bid is fully accepted, sensitivity analysis on submitted amount should be conducted until the new submitted amount is partly accepted. Then, sensitivity analysis on submitted bid price for the case of partly accepted bid can be performed. The reason that performing a sensitivity analysis on the submitted amount is suggested first is that it is simpler than to perform sensitivity analysis on the submitted bid price.

8.6.2.1 When the submitted bid was not accepted

This case is when ΔP_{sk}^{old} was not one of the optimal basic variables. The RCC of all variables do not change except the RCC of ΔP_{sk}^{old}, which changes as shown in (8.8). The goal of changing the bid price is to get bid accepted and this can occur when RCC_k^{new} is positive (assuming multiple optima are not considered). Equation (8.9) shows the required change in the submitted bid price, which will result in pivoting the associated variable ΔP_{sk}^{new} into the basis. However, this does not guarantee that ΔP_{sk}^{new} will stay in the basis until the optimality is reached. In other words, the required change in (8.9) does not guarantee that the bid will be accepted eventually. A negative RCC_k^{old} implies that at least the change in submitted bid price must be negative, which indicates that GENCO k must reduce bid price. Note that if the player who performs sensitivity analysis is an ESCO, the negative change in submitted bid price indicates that this ESCO must increase its bid price. The preliminary result of sensitivity analysis is in accordance with practical way to adjust the bid that sellers reduce bid prices and buyers increase bid prices to get bid accepted.

$$RCC_k^{new} = RCC_k^{old} - \Delta c_k \tag{8.8}$$

$$\Delta c_k < RCC_k^{old} \tag{8.9}$$

To determine the amount of change in submitted price needed to get bid accepted, parametric analysis can be used for this purpose and is suitable for comprehensive study. However, parametric analysis might consume time and a comprehensive result is not always needed. Another way is to specify a reasonable amount of change in submitted price and then use sensitivity analysis with the specified amount. If the result is not satisfied, a new specification can be made. This process can be repetitive until the solution is satisfied.

8.6.2.2 When the submitted bid was partly accepted

This case is when ΔP_{sk}^{old} was one of the optimal basic variables. The RCCs of all basic variables are zeros and RCCs of all nonbasic variables change as shown in (8.10). Note that the index l of y_{lj} denotes the associated row of basic variable ΔP_{sk}^{old}. The goal of changing the bid price in this case is to get same amount accepted at a higher bid price for a GENCO (or a lower price for an ESCO) or to increase the amount accepted.

When considering the case with the same bid amount accepted at a lower bid price for a GENCO (or a higher price for an ESCO), the values of all nonbasic variables' RCC_j^{new} in (8.10) are required to be nonpositive. There is no pivoting. Equations (8.11) and (8.12) show the required change of the submitted bid price. The value of Δc_k is positive to represent a higher price of a GENCO's submitted bid and a lower price of an ESCO's submitted bid. Because RCC_j^{old} is negative, (8.11) indicates the maximum limit of Δc_k. Equation (8.12) does not provide any additional information because Δc_k is positive in this case.

$$RCC_j^{new} = RCC_j^{old} + \Delta c_k * y_{lj}\,,\ all\ j\ of\ nonbasic\ variables \tag{8.10}$$

$$\Delta c_k < min\ \{ -RCC_j^{old} / y_{lj}\,,\ y_{lj} > 0\,,\ all\ j\ of\ nonbasic\ variables\} \tag{8.11}$$

$$\Delta c_k > max\ \{-RCC_j^{old} / y_{lj}\,,\ y_{lj} < 0\,,\ all\ j\ of\ nonbasic\ variables\} \tag{8.12}$$

The next case considers increasing the amount accepted. In this case, Δc_k is needed to allow at least one of the nonbasic variables' RCC_j^{new} in (8.10) to be positive. Then, pivoting is performed. However, this does not guarantee that the accepted bid of GENCO k will increase or will even still be accepted. No apparent conclusion can be made. Detailed study must be carried to find the new optimal result. Parametric analysis or trial with some reasonable values of Δc_k can be conducted like what was explained in the section when the submitted bid was not accepted.

From the illustration of sensitivity analysis of submitted bid amount and submitted bid price, there are no specific conclusions generally available for developing bidding strategies. The following is an algorithm that integrates sensitivity analysis on submitted bid amount and submitted bid price together.

Step 1: Was the bid in the base case partially accepted, fully accepted or not accepted? If fully accepted, go to step 2. Otherwise, go to step 4.

Step 2: Check the sign of the associated element of the inverted optimal basis matrix (for sensitivity analysis on the submitted bid amount), $M_{i,j}^{-1}$. If positive, go to step 3. Otherwise, go to step 4.

Step 3: Perform sensitivity analysis on the submitted bid amount and calculate the new solution. If the new submitted bid amount is fully accepted, go to step 2. If the new submitted bid amount is partially accepted, go to step 4.

Step 4: Perform sensitivity analysis on the submitted bid price. If the purpose is to get same bid amount accepted at a higher bid price for a GENCO (or a lower price for an ESCO), go to step 5. If the purpose is to get the accepted bid increased, go to step 6.

Step 5: For GENCOs, reduce the bid price for the amount not exceeding the limit shown in (8.11). For ESCOs, raise the bid price for the amount not exceeding the limit shown in (8.11). Then use this new bid price to perform sensitivity analysis to find the new accepted bid and the study is finished.

Step 6: Perform parametric analysis or a trial with some reasonable values of Δc_k on the bid price to select the new bid price. If the new bid amount is entirely accepted, go to step 2 (and possibly step 3), and the study is finished. If there are not any values of Δc_k that can make the accepted bid increased, the study purpose could be changed to get the same bid amount accepted at better bid price, which can be done by performing step 5 and the study is finished.

8.6.3 Increase in line limit or adding a line

The purpose of this section is to study which line to be added will be beneficial to the accepted bids (i.e., increasing the accepted bids). This process utilizes sensitivity analysis on the RHS. The formula for calculating the new accepted bid amount of GENCO k is shown in (8.13), assuming other quantities are constant. The ith row and jth column are assumed to be the associated indices in calculation; i.e., the accepted bid amount of GENCO k is at the order of ith row and each line limit is at the jth row. As same as changing submitted bid amount, this process does not change the RCC and thus the only possible violation on optimal conditions is that the some elements of the new solution become negative. If this happens, the dual simplex method is used to pivot to get the new optimum. Thus, although only (8.13) is shown for ΔP_{sk}^{new}, other optimal basic variables must be calculated to ascertain that they are still nonnegative.

Note that the summation sign on (8.13) is for limits in both directions of all lines. In other words, each line has a flow limit in either direction and thus the number of line limit constraints is two times the number of lines. Consequently, the number of terms within the summation sign is two times the number of lines.

$$\Delta P_{sk}^{new} = \Delta P_{sk}^{old} + \sum M_{i,j}^{-1} * \Delta P_l^{max} \tag{8.13}$$

In (8.13), a positive (negative) value of $M_{i,j}^{-1}$ indicates that increasing the line limit raises (lowers) the accepted bid amount. If the values of $M_{i,j}^{-1}$ are zero, increased line limit does not affect the accepted bid amount. This can help in making a decision on whether to add the line. A sensitivity analysis of the line limit on the auction results is useful when the line limit is hit. A great number of results should be observed to make a decision on which line should be added to be beneficial to the bid acceptance.

The $M_{i,j}^{-1}$ values of the lines that do not hit the limits are zeros. For each line that hits the limit, the $M_{i,j}^{-1}$ value of the direction opposite to the flow is zero, while the $M_{i,j}^{-1}$ value of the flow direction may either be zero or nonzero. If increasing the limit is beneficial to the accepted bid (i.e., increasing the accepted bid), the $M_{i,j}^{-1}$ value is positive. If increasing the limit is detrimental to the accepted bid (i.e., reducing the accepted bid), the $M_{i,j}^{-1}$ value is negative. If increasing the limit does not affect the accepted bid, the $M_{i,j}^{-1}$ value is zero.

Two examples are shown to illustrate the nature of $M_{i,j}^{-1}$ values, which are based on the transmission system in Figure 3.1. The values of $M_{i,j}^{-1}$ in both examples are shown in Table 8.4. The same example used in chapter 3 is modified for use here. The first example modifies only the line limit of line 3 to be 50 MW. The auction results change; accepted bid amounts of GENCOs 1, 2, and ESCO 1 are 9.15, 10.94, 20.00 MW; flow in line 3 (from buses 2 to 3) hits the limit at 50 MW. It can be seen that the values of $M_{i,j}^{-1}$ are all zeros except the elements that belong to GENCOs 1 and 2 with the flow from buses 2 to 3. The element of GENCO 1 is negative and this indicates that increasing line 3's limit has detrimental effect to the accepted bid of GENCO 1. On the other hand, the element of GENCO 2 is positive and this indicates that increased line 3's limit has beneficial effect to the accepted bid of GENCO 2.

The first example modifies only the line limit of lines 3 and 4 to be 60 and 65 MW, respectively. The auction results change; accepted bid amounts of GENCOs 1, 2, and ESCO 1 are 0.76, 15.00, 15.69 MW; flow in line 4 (from buses 1 to 3) hit the limit at 65 MW. It can be seen that the values of $M_{i,j}^{-1}$ are all zeros except those elements that belong to GENCO 1 and ESCO 1 with the flow from buses 1 to 3. The element of GENCO 1 is positive and this indicates that increased line 4's limit is beneficial to the accepted bid of GENCO 1. On the other hand, the element of ESCO 1 is negative and this indicates that increased line 4's limit has detrimental effect to the accepted bid of ESCO 1.

Table 8.4 Values of $M_{i,j}^{-1}$

Line	Flow		Example 1			Example 2		
	From Bus	To Bus	GENCO 1	GENCO 2	ESCO 1	GENCO 1	GENCO 2	ESCO 1
1	1	4	0	0	0	0	0	0
	4	1	0	0	0	0	0	0
2	4	2	0	0	0	0	0	0
	2	4	0	0	0	0	0	0
3	2	3	-2.1251	2.1245	0	0	0	0
	3	2	0	0	0	0	0	0
4	1	3	0	0	0	1.3094	0	-1.3094
	3	1	0	0	0	0	0	0

8.6.4 Incorporate other players' reactions

If reaction functions among bidders can be forecasted, the reaction functions can be used for sensitivity analysis on the RHS or on the cost coefficients. For each bidder, other bidders' changes of submitted bid prices (amounts) can be written as functions of the bidder's submitted bid prices (amounts). For a specified value of the bidder's submitted price (amount), other bidders' submitted bid prices (amounts) can be calculated. Then,

the new solution can be calculated and if the new solution is satisfactory, stop. Otherwise, the new bid value is satisfactory and the same process is applied. Parametric analysis can also be used. The reaction functions can be approximated as a direction of changes in submitted bid prices (amounts) for the parametric analysis. The methods for simulating the reactive functions are not in the scope of this work. Conjecture variation methods in economics is one of the areas that can be applied for determining reactive functions [Binger, 1988].

8.7 Integrating market power with market reach enhancement

As mentioned earlier in this work, some GENCOs will have market power even after deregulation. This section discusses using market power to enhance the market reach. The basic form of market power studied in this section assumes a GENCO owns generating units in multiple locations. This work investigates how this multiple-location GENCO can modify the bid in each location to favor the bidding. In other words, this GENCO can find a combination of the bids in all its locations to enhance its net profit. The GENCO might lose money in bidding in some locations but gain money in other locations. This is acceptable as long as the net gain exceeds the net loss. In addition, this GENCO can use this advantage to take market power away from other bidders. For simplicity and without loss of any generality, the following analysis assumes the generating units 1 to t belong to the same owner.

The process is similar to that used when a GENCO owns a single unit. The difference is that now there are more options (combinations of bids) for the GENCO. The following outlines how to determine the combinations in adjusting submitted bid amounts or bid prices. The analysis that will be shown uses the method of trial with some reasonable values to give the insight of the interactions of results from adjustment. Practically, parametric analysis is recommended in the case of multiple generating units owned by GENCOs because the problem is complex and it might be difficult to specify some preferred feasible adjustment by just observing the result of the base case.

This study is conducted to enhance the market reach of GENCOs by using the market power they have. However, the ISO can conduct the same study to investigate market implementation to reduce or eliminate the bidding advantage of using market power.

8.7.1 Change in submitted bid amount

This section explains how a GENCO with multiple units analyzes the combinations of the submitted bid amounts of all units. Equations (8.14) and (8.15) yield the new accepted amounts of generating units 1 and 2, assuming other quantities being equal. Equations for determining the new accepted amounts of generating units 3 to t can be shown similarly. The indices of the variables in (8.14) and (8.15) deserve some explanation. The accepted bid amount of generating units 1 and 2 are at the order of ith and eth rows of the simplex tableau, respectively. For ease of notation, the submitted bid amounts of generating units 1 to t are assumed to be at the 1st, 2nd, ..., and tth rows, respectively. If $M_{i,1}^{-1}$ is negative and $M_{i,2}^{-1}$, $M_{e,1}^{-1}$, and $M_{e,2}^{-1}$ are positive, generating unit 1 would not increase the submitted bid amount in the case when it is owned by a single owner. However,

since generating units 1 and 2 are owned by a single owner, submitted bid amounts of generating units 1 and 2 could be both increased as long as the total profit increases, which must be ascertained from the aggregation calculation of generating units 1 to t. The example equations are illustrated to only generating units 1 and 2 but can be generalized to other generating units (generating units 3 to t in this case) owned by the same owner.

$$\Delta P_{s1}^{new} = \Delta P_{s1}^{old} + M_{i,1}^{-1} * \Delta B_{s1} + M_{i,2}^{-1} * \Delta B_{s2} + \ldots + M_{i,t}^{-1} * \Delta B_{st} \tag{8.14}$$

$$\Delta P_{s2}^{new} = \Delta P_{s2}^{old} + M_{e,1}^{-1} * \Delta B_{s1} + M_{e,2}^{-1} * \Delta B_{s2} + \ldots + M_{e,t}^{-1} * \Delta B_{st} \tag{8.15}$$

8.7.2 Change in submitted bid price

This section outlines how a GENCO with multiple units analyzes the combinations of the submitted bid prices of all units. Generating units 1 to t belong to the same owner. The bids of some of them are not accepted, some are partially accepted, and some are fully accepted. The algorithm presented previously when each generating unit is owned separately can still be used. It must be applied to the bid of each generating unit separately. One must use caution as getting bid accepted might cause other accepted bids to decrease or even unaccepted. Although this would be allowable if the total profit increases, it would be better if entering one bid to the basis does not take other bids out of the basis simultaneously. This could be done by choosing the bid to get into the basis so that the component having the minimum of the *RHS/y* does not belong to the bid of one of the owned GENCOs.

8.8 Chapter conclusions

Deregulating the vertically integrated electric power industry removes much of the vertical market power previously held by electric utilities. Nevertheless, horizontal market power can still exist. The ICA must be capable of detecting participant market power. The modified Lerner index can be applied in detecting market power in the deregulated electric power industry. Prudent analysis is needed along with the modified Lerner index because the transmission network connects all the bidders together and so the effect of one bidder's actions can distribute to remote bidders. The investigation of market power should be carried over a number of periods before any conclusions are made because market power is dynamic. The dynamic effects are reflected in the calculated index, which is calculated based on the system condition that changes dynamically among periods. If a detailed analysis is required, a simulation approach can be utilized.

Market reach is closely related to market power. This work illustrates several methods for measuring market reach. The sensitivity analysis presented here provides more detailed results than other methods. The method of enhancing market reach is based on the sensitivity analysis method. The methods can be similarly applied to adjust tap-changers or phase shifters. Although market reach is explained from the viewpoints of GENCOs, the procedures described here can be used by the ICA to determine whether any GENCOs or ESCOs have too much market reach or not.

9 APPLICATION OF AUCTION RESULTS TO POWER SYSTEM EXPANSION

9.1 Chapter overview

Auction result reflects the market condition at the time the auction is performed. The market condition consists not only of electricity demand and supply at that period, but also includes the transmission network condition at that period. As explained in previous chapters, the network condition plays a major role in the auction results. If some transmission lines are congested, it can interfere with the desired operation of the network; e.g., block the transaction from the cheap sources to the high demand areas. Because of these reasons, the ICA may wish to consider auction results when making decisions related to power system expansion. This chapter outlines a framework of applying a decision analysis approach to the auction results in selecting the expansion plan for the system.

9.2 Introduction

Auctions can be conducted for durations of any length, e.g., every 15, 30, or 60 minutes. Auction results for different periods are different because of different bids and power system conditions. Different generator and/or transmission network conditions are coupled to different contingencies. For example, one transmission line out of service and one generator out of service are considered different contingencies. If auctions are conducted hourly, there will be about 720 different auction results per month, each coupled to different scenarios. Auction results in a large number of periods can be aggregated by an on-peak/off-peak or weekend/weekday model. In addition, auction results can be aggregated through some other rational combination from hourly to monthly model.

There exist many choices for power system expansion. In other words, additional generators and/or lines can be added to the system in many different ways. The auction results for a large number of periods can indicate candidate generators and/or transmission lines for power system expansion. For example, if a transmission line is often congested in many auction results, the location of this transmission line can be a candidate for building a new transmission line. As discussed in chapter 7, the dual value of the congested line indicates the benefit of increasing line capacity and it can be used for selecting the candidates for new lines. Note that the case of additional lines is different from the case of increasing transmission line capacity because additional lines change the effective impedance between buses while increasing transmission line capacity does not.

After all the new generator and/or line candidates have been identified, each of these candidates is introduced to the power system network and new auction results are calculated for each case. The new auction

results are compared to the existing auction results and a justification can be made that a particular line is the optimal decision for expansion. A decision analysis method is used to justify which additional line is the optimal choice. It can be seen that a great amount of calculation is needed for calculating the new auction results for each of the new line candidates. Thus, the method of calculating auction results must be very fast, making the interior-point linear programming method very suitable.

This work is intended to aid in power system planning. The planning engineer can use this information combined with other power system planning methods for optimal decisions in planning. Methods of power system planning are well illustrated in Wang, 1994.

The remainder of this chapter is organized as follows. Section 9.3 explains the application of decision analysis with the auction results to aid in power system expansion. An example is included to illustrate the calculation of the benefit when an expansion plan is applied to an auction. Section 9.4 concludes this chapter.

9.3 Applying decision analysis

This section explains the procedure of applying decision analysis with auction results to aid in power system expansion. The major components are a decision tree, new auction result calculation, and data aggregation. New auction results are calculated according to each expansion plan. Data aggregation is composed of aggregating the old and new auction results systematically and then calculating the benefits of the associated expansion plan, which is equal to the difference of the objective function values of auction formulations between the old and new auction results. Note that the decision tree and the data aggregation described in this chapter are selected from various possibilities that can be used. The selection of decision tree and data aggregation depends on the analyst.

9.3.1 Decision tree and data aggregation

This section explains two major components of the procedure. The process of calculating new auction results according to an expansion plan will be described in next section. Figure 9.1 shows the decision tree. A square in the decision tree represents a decision node and a circle in the decision tree represents a chance node. A decision node is where the decision is made to select which expansion plan to use. In the picture, there are $(n+1)$ possible expansion plans to use. Each expansion plan can include new generator and/or line candidates. One of them is not expanding, which serves as a base case. Note that the branch of non-expansion is the end and not connected to any other nodes.

The next part of the decision tree connecting to each expansion plan is the data aggregation process. The data aggregation process is composed of several chance nodes. The first chance node (shown in Figure 9.1) classifies contingencies. The second, third, and fourth chance nodes are shown in Figure 9.2. The second chance node categorizes four seasons. The third chance node assorts into weekdays and weekend. The fourth chance node distinguishes the scenarios by time of day including day time, evening, and late night. It can be seen that the data aggregation process on the time is based on the pattern of demand. For example, electricity is

consumed highly in summer comparing to other seasons and the consumption is different in different seasons. This is why the second chance node categorizes the scenarios into summer, fall, winter, and spring.

Normally a chance node is the connector of uncertain events with the associated probabilities. The data aggregation process from the second to the third chance nodes is actually dividing the data into different periods. Although they are not really uncertain events, the concept of chance nodes can be applied with them. The adaptation involves calculating the probability values by the percentage of the periods considered. For example, at the second chance node, probabilities of summer, fall, winter, spring are calculated from the percentage of actual days in each season in a year.

From the figures, there will be ($n*m*4*2*3+1$), which is ($24*n*m+1$) end points in total at the end of the decision tree. There are a great number of auction data and it will take tremendous calculation in the study, especially at the process of calculating the new auction result, if all the auction data are taken into account. Thus, only part of the auction data will be utilized for the study. The procedure of data selection proposed in this work is to specify the number of auction results that will be taken into account. The days and time in which the auction results are taken into account are randomly selected. The chosen days should be the same for different time considered. For example, for the category "summer, weekdays", the auction results selected to use for daytime, evening, and late night should be on the same day.

Each expansion plan is connected with the first chance node, which represents uncertain contingencies. In the picture, there are m contingencies (m branches) associated with an expansion plan. The m branches can be composed of the (m-2) branches representing (m-2) contingencies focused in the study, a branch representing the rest of the contingencies together, and a branch representing the normal condition. Each contingency connected to the chance node is associated with a certain chance (probability) that each contingency can occur.

9.3.2 Expected benefit

At the end point of each branch, a criterion is calculated for each end point. The criterion used in this study is the benefit from expansion, which is the difference in the objective function values of the auction formulation between with and without expansion plan. The objective function of the auction is trading surplus minus the change in transmission usage cost (based on the maximization type problem), based on (2.1). When a new auction result is calculated associated with an expansion plan, the new objective function is calculated and then the objective function value of the base-case auction (real result) is subtracted. The difference is the benefit from an expansion plan. Then an expected benefit associated with each expansion plan is calculated. The expected benefit is the summation of the products of all probabilities and benefits associated with a chance node. The calculation starts from the end and is repeated successively until the first chance node (most adjacent to the decision node) is reached. Note that the expected benefit of the non-expansion decision is zero because the benefit is the difference between the objective function value of the auction with expansion plan comparing to the objective function value of the real auction, which is the non-expansion case.

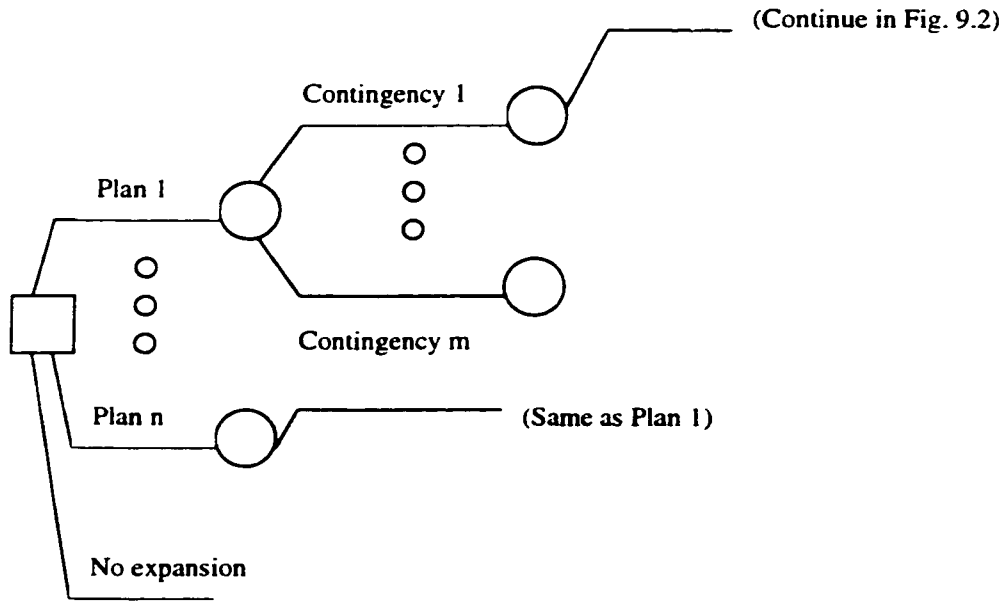

Figure 9.1 Decision tree

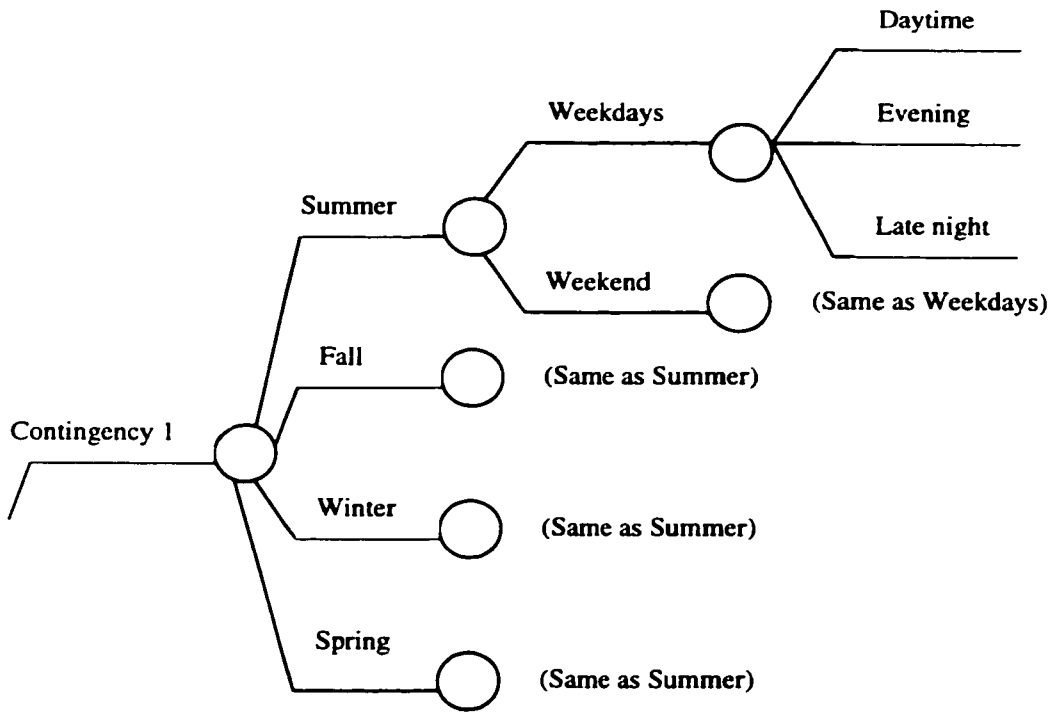

Figure 9.2 Aggregation of results

9.3.3 New auction result calculation

Although only part of the auction results will be taken into account, the number of auction results is still many. This also means that a great number of new auction results associated with all expansion plans must be calculated. Thus, the method of calculating auction results must be very fast, and the IPLP method is very suitable.

The procedure for calculating a new auction result is as follows. According to an expansion plan, a certain number of generators and/or line candidates are to be added. A power flow is performed to find the new power flow solution before the auction at a specified period occurs. Then the new auction result is calculated with the new network condition that incorporates the new generators and/or lines according to the expansion plan, assuming that the bids do not change. If the expansion plan includes new generators, a certain bidding behavior needs to be assumed. Because of lack of information, the competitive behavior can be simply assumed for the new generators.

The following example illustrates a procedure of using IPLP to calculate the new auction results for a new line candidate. The case study here continues from that in chapter 7. Enhancing the results presented in sensitivity analysis case B, the transmission usage cost is incorporated and minimized in the objective function. The result for the base case is recalculated after the transmission cost is incorporated. To calculate the new auction result, a new power flow result is calculated for the power system with an additional line. The candidate line to add is between buses 2 and 4 (line 5). The additional line is identical to the existing line 5. Line 5 is chosen because line 5 is congested in the base case. A detailed analysis will be provided below.

9.3.3.1 Network data

The six-bus system shown in Figure 7.1 is used in implementing the result. The network data is shown in Tables 7.2 and 7.3. There are six bidders in the system, three GENCOs and three ESCOs. The additional data used in this section is transmission usage cost data, which is shown in Table 9.1. Transmission usage cost here is based on dollars per megawatt-mile approach.

Table 9.1 Transmission usage cost data

Line	1	2	3	4	5	6	7	8	9	10	11
Cost ($/MW)	0.90	0.47	0.60	0.19	0.04	0.14	0.22	0.16	0.04	0.18	0.25

9.3.3.2 Result

Accepted bids in the base case (Table 9.2) are different from those in the chapter of IPLP (Table 7.4). This is because transmission usage cost (data shown in Table 9.1) is included in this chapter. Table 9.3 shows the new auction results when an additional line (line 5) is added to the system. Table 9.4 shows a result comparison

between the cases with and without a line. The first row is the result of the base case and the second row is the result of the case with Net surplus is the trading surplus minus the change in transmission usage cost. After line 5 is added, the trading surplus is higher (getting better); transmission usage cost is higher (getting worse); and the net surplus is higher (getting better). In this case, the benefit is 1.87 $/hr.

Table 9.2 Base case's bid result

Bids	GENCO 1	GENCO 2	GENCO 3	ESCO 1	ESCO 2	ESCO 3
Price	9.70	8.80	7.00	12.00	10.50	9.50
Submitted amount	20.00	25.00	20.00	25.00	10.00	20.00
Accepted amount	0.00	13.71	20.00	23.67	10.00	0.00

Table 9.3 Bid result with an additional line

Bids	GENCO 1	GENCO 2	GENCO 3	ESCO 1	ESCO 2	ESCO 3
Price	9.70	8.80	7.00	12.00	10.50	9.50
Submitted amount	20.00	25.00	20.00	25.00	10.00	20.00
Accepted amount	0.00	14.92	20.00	25.00	10.00	0.00

Table 9.4 Comparison of the result between cases with and without an additional line

Case	Trading surplus	Change in transmission cost	Net surplus
Base case	128.41	-9.31	137.72
Case with an additional line	133.68	-5.91	139.59
Difference (new case – base case)	5.27	-3.40	1.87

9.4 Chapter conclusions

This chapter describes the application of decision analysis with auction results to aid in power system expansion. A decision tree is constructed and the aggregation of auction results is incorporated to the decision tree based on the concept of chance nodes. The expansion plan is selected based on the expected benefit. Because there are plenty of computations needed for calculating the new auction results associated with the expansion plans, IPLP is an appropriate method of solving the problems quickly. The application of IPLP to calculate auction results is illustrated in chapter 7. The application of decision analysis with auction results provides important information to help the ICA select the optimal expansion plan for the system.

10 BIDDING INFORMATION TO GENERATE BIDDING STRATEGIES FOR LAGRANGIAN RELAXATION-BASED AUCTIONS

10.1 Chapter overview

LaGrangian Relaxation (LR) is used as an auction method for bidding in a deregulated environment. Identical or similar units can prevent LR from finding the optimal solution when only one of the units should be committed. If many units are similar, LR may have trouble selecting some subset of them for the optimal solution. A unique feasible solution may thus not be found. This leads to inequity among the unit(s) not selected and may result in less revenue for one or more competitors. Because the dispatcher would then have to use heuristic selection, there is no "fair" solution to these problems. This chapter focuses on how to change unit data to obtain an advantage while using LR as an auction method. Alternative strategies are suggested based on previously published problems with selection by unit commitment and subsequent dispatch by economics. Sensitivity analysis results demonstrate the method for finding the percentage difference between units to affect the solution.

10.2 Introduction

Some central coordinating entities have already adopted the LaGrangian relaxation (LR) based auction for trading power. LR-based auction is a power pool-type auction that formulates the auction problem as unit commitment (UC) problem and uses LR to find the solution. The LR-based auctions and other types of auctions are illustrated and compared in [Dekrajangpetch, 1997]. Hao et al. [Hao, 1997] and Jacobs [Jacobs, 1997] discussed the objective functions of power pool-type auctions. The discussion is on cost minimization versus consumer payment minimization. Post [Post, 1994] gave a good explanation of auctions. Sheblé et al. [Sheblé, 1992] and Wood et al. [Wood, 1996] explain the basics of LR-based UC.

LR has been successfully applied to the UC problem. The UC problem is a large-scale mixed-integer nonlinear programming problem [Sheblé, 1992, Wood, 1996]. The UC problem is more complex due to the incorporation of various hard constraints (e.g. ramp rate constraints, minimum up-times, minimum downtimes, emission constraints, pond level constraints of pump storage units, etc.). The LR algorithm is successful since a LaGrangian multiplier updating procedure has been suitably developed to converge efficiently with a subsequently very small duality gap. Fisher [Fisher, 1981] reviewed three approaches for updating LaGrangian multipliers, the subgradient method, column generation techniques of the simplex method, and multiplier adjustment methods. Among these methods, the subgradient method is promising and is widely used in UC.

LR has many advantages over other methods used for solving the UC problem. Specifically, LR's computational requirement varies linearly with number of generation units (N) and stages (T). The

computational requirement of dynamic programming (DP) varies exponentially with N and T, $(2^N-1)^T$. This difference is primarily due to the heuristic rules required by LR to convergence. The solution found by LR might not be feasible or near optimal if the LaGrangian multipliers have not been updated properly.

The difficulty in updating LaGrangian multipliers has led to problems that occur in implementing LR-based auctions. The problems stem from selecting identical or similar generating units. These units can prevent LR from finding an optimal solution or even a feasible solution. In addition the solution found may be inequitable to similar units because the decision to alter data made by the dispatcher is heuristic. This will result in contested auctions. The details of these problems are illustrated in detail in [Dekrajangpetch, 1999a]. Johnson et al. [Johnson, 1997] showed the effects of variations in the near optimal solution from LR-based UC to the profits of units in the competitive electricity market. Conejo et al. presented case studies on the problems of LR UC in [Conejo, 1998].

Such details were originally noticed by Virmani et. al. [Virmani, 1989] who observed these implementation aspects of LR while applying it to realistic and practical unit commitment (UC) problems. They also discussed handling the identical generating units, by committing them as a group or adjusting their heat rates slightly to make them distinct and then committing them separately. There will be many independent power producers (IPP) or Generation Companies (GENCO) in the competitive market with the most recently developed gas turbine units and therefore identical or similar generating units will be prevalent. This prevents us from handling the identical units as they were handled in [Virmani, 1989]. Adjusting the heat rates cannot be used due to the contractual nature of the bid. Since so many units are expected to be similar, the solution found by committing as a group may not be the optimal solution for the system.

This chapter focuses on how to change unit data to obtain an advantage while using LR as an auction method. Alternative strategies are suggested based on previously published problems with selection by unit commitment and subsequent dispatch by economics. The auction scenario considered is one-sided and the objective function is cost minimization. The suggested strategies can be applied to both uniform and discriminating pricing. Uniform pricing means every generation company (GENCO) gets paid the same price while discriminating pricing means each GENCO gets paid corresponding to its bid.

Section 10.3 explains the formulation, the algorithm, and the LaGrangian multiplier updating procedure for LR used in this work. The subgradient method is used for updating LaGrangian multipliers. The notation used in this chapter is also presented. Section 10.4 describes the implementation problems of LR. The problems are divided into two categories, problems with identical units and problems with similar units. The results of testing with four generator systems are described. The results in section 10.4 are from [Dekrajangpetch, 1999a] that provides excellent examples of how bidding strategies can take advantage of implementation problems. The central theme of this work is to identify and develop bidding strategies that will enhance the acceptance of GENCO bids. Section 10.5 illustrates the strategies used in submitting bids for GENCOs to gain an advantage over competitors. The procedure of changing unit parameters to gain advantage based on the strategy is also illustrated. Section 10.6 outlines sensitivity analysis results on the four unit system. The sensitivity analysis is

performed on three parameters of two peak units, linear and constant coefficients of unit cost function, and start-up costs. This section shows the percentage of difference between individual parameters of these two units that will result in the optimal solution while fixing other parameters. Section 10.7 suggests parameter changes for real-time maximum generation. Section 10.8 summarizes how to change unit parameters based on the strategy in sections 10.5 and 10.7 and the sensitivity analysis results in section 10.6. Section 10.9 presents conclusions of this research and other methods proposed to implement auctions.

10.3 LaGrangian multiplier update

This section outlines the formulation, algorithm, and LaGrangian multiplier updating procedure for LR used in this work. The notation used in this chapter is also described in this section. This work uses the formulation and algorithm of LR for UC described in Merlin et al. [Merlin, 1983], except for the following simplifications. The spinning reserve constraints have been neglected. The minimum-up and minimum-down time constraints are neglected. The fuel cost is assumed a quadratic function. The criterion for stopping is reached when duality gap is less than or equal to 0.026. Another criterion added to the algorithm is that LR will terminate when number of iterations exceeds 100. The reason that a rather big number (100) is used for the small studied system is because the cases studied are those in which LR has difficulties in converging to the optimal solution and thus possibly need higher number of iterations to converge than the normal cases. The subgradient technique is used for updating LaGrangian multipliers.

The notation used in this chapter is:

P_i^t	power produced by unit i at stage t
P_i^{min}	minimum capacity of unit i
P_i^{max}	maximum capacity of unit i
a_i	quadratic coefficient of fuel cost of unit i
b_i	linear coefficient of fuel cost of unit i
c_i	constant coefficient of fuel cost of unit i
$stup_i^t$	start-up cost of unit i from stage t-1 to t
$load^t$	demand at time t
λ^t	LaGrangian multiplier at time t
λ	vector containing λ^t from t=1 to t = T
$iter$	number of current iterations
N	number of generating units
T	number of stages

Each lambda is updated according to a heuristic rule where α and β are constants [Zhuang, 1988].

$$\lambda^{t} = \max\left[\lambda^{t} + \frac{pdif^{t}}{(\alpha + \beta * iter) * norm(pdif)}, 0\right] \tag{10.1}$$

$pdif^t$ is the conservation of energy mismatch for each hour:

$$pdif^{t} = load^{t} - \sum_{i=1}^{N} P_i^t \tag{10.2}$$

So $pdif$ is a vector containing $pdif^t$ from t=1 to T. $norm(pdif)$ is the Euclidean norm. P_i^t here is calculated from dynamic programming, not from Economic Dispatch.

The values of α and β are determined heuristically. The general guidelines for selecting their values are explained in [Zhuang, 1988]. In this work, the values used can be divided into two categories according to sign of $pdif^t$ as follows:

Category 1: $pdif^t > 0$: α=0.02, β=0.05.

Category 2: $pdif^t \leq 0$: α=0.5, β=0.25.

These values are found from experimentation for each system as reported in the literature and informal presentations.

10.4 Problems in implementation

The system under investigation here is composed of four generating units (modified from Wood et al. [Wood, 1996]) and these units are committed for four stages. Start-up cost is not incorporated in Cases A or B because the illustration of the problem is clear without it. Cases C and D include start-up cost.

Different starting λ can cause LR to find different solutions when the range of the optimal λ is small. Thus, in each section, multiple starting λ were used for each experiment. These starting values are what cause LR to not find the best or any solution. All of the starting λ used in this work are summarized in Table 10.1. Each of the starting λ is composed of four elements, one for each time period. These four elements are ordered from the first to the fourth stage.

The implementation problem can be separated into two main categories.

10.4.1 Problem: Identical units

There are two primary effects when identical units exist. The first is that LR may find only suboptimal solutions. The second is that LR may be unable to find any feasible solutions.

Table 10.1 Reference notation for λ

Notation	λ
λ_a	[12.5 12.5 12.5 12.5]
λ_b	[6 6 6 6]
λ_c	[7.7 9.8 16.3 14.2]
λ_d	[9 9 9 9]
λ_e	[6 6 12.5 12.5]
λ_f	[6 6 12.5 6]
λ_g	[6 12.5 12.5 6]

10.4.1.1 Finding only sub-optimal solutions

The generating unit data to demonstrate this problem is shown in Table 10.2. Unit one is identical to unit four. Unit three is the least expensive unit, and units one and four are the most expensive units. System loads are shown in Table 10.3. This data constitutes Case A.

The solution found by LR is shown in Table 10.4. The solution found by LR is not the optimal solution. The solution found from LR is the same as the optimal solution at stages 1, 2, and 4 but is different from the optimal solution at stage 3. Unit 1 or 4 may be selected to generate at 500 MW at stage 3 for the optimal solution. However, both units 1 and 4 are selected to generate at 250 MW at stage 3 for the solution found by LR. The total cost of the optimal solution is $20,162.75. This is less expensive than the cost of the solution that LR found, $20,412.75. The difference in the cost is more pronounced when the start-up costs are taken into account. This is because two units, units 1 and 4, are turned on at stage 3 for the solution found by LR, while only one unit, either unit 1 or 4, is turned on at stage 3 for the optimal solution.

The problem arises because LR uses DP to find the optimal solution for the subproblems. Identical or very similar units must have the same optimal states for DP to find the best solution. This is why LR cannot find the optimal solution that selects either unit 1 or 4 at the third stage. Neither this means that the solution found by LR may not be the least expensive nor the best for the whole system when identical or very similar units exist.

Table 10.2 Case A: Generating unit data

Unit(I)	a_i	b_i	c_i	P_i^{min}	P_i^{max}
1	0.002	10	500	100	600
2	0.0025	8	300	100	400
3	0.005	6	100	50	200
4	0.002	10	500	100	600

Table 10.3 Case A: Load data

Stage	1	2	3	4
Load	170	520	1100	330

Table 10.4 Case A: Solution

Stage(t)	Unit 1	Unit 2	Unit 3	Unit 4
1	0	0	170	0
2	0	320	200	0
3	250	400	200	250
4	0	130	200	0

10.4.1.2 Not finding any feasible solutions

Units 1 and 4 are identical units to demonstrate this problem. The system load at the third stage is changed to be between the summation of P_i^{min} of units 1, 2, 3, and that of units 1, 2, 3, 4. In addition, P_i^{max} of units 2 and 3 are reduced so that only selecting units 2 and 3 cannot meet the load at the third stage. The purpose of changing data in this way is to force only either unit 1 or 4 to be selected at the third stage. The loads at other stages are reduced to accommodate the decreased total maximum capacity. The generating unit data is the same as in Table 10.2, except that P_i^{max} of units 2 and 3 are changed to 150 and 80 respectively. The load data is shown in Table 10.5. This constitutes Case B.

Table 10.5 Case B: Load data

Stage	1	2	3	4
Load	80	210	340	350

Three starting values for λ have been used to demonstrate the importance of the initial guess for LR. After running 100 iterations for each starting λ, LR could not find any feasible solutions. The reason is that to cover the load at the third stage at the lowest cost requires units 2 and 3 to be selected. Units 1 and 4 can only be committed in two possible combinations of states; both units are either selected or not selected. The case in which both units are not selected cannot occur because the summation of P_i^{max} of units 2 and 3 is less than 340. The case in which both units are selected cannot occur because the summation of P_i^{min} of units 1, 2, 3 and 4 are larger than 340.

This example points out another disadvantage of using LR for auctions when identical and very similar units exist. Not only does LR not find the real optimal solution, but it is also sometimes difficult for LR to even find a feasible solution.

A concluding remark is based on the economic interpretation of the LR iterations. If an energy market is considered, the LR algorithm proposes a sequence of hourly prices (λ) to buy energy from GENCOs. Each GENCO independently plans their output power in response to the price sequence, meeting their respective constraints. This results in a surplus of power in some hours and deficit of power in some other hours. The LR algorithm balances demand by modifying the sequence of prices. A reasonable procedure is to modify prices proportionally to their corresponding mismatches (subgradient). This procedure is repeated until convergence in prices is attained. These prices are in turn implemented. A reserve market working in a similar fashion as the energy market can also be implemented.

Thus identical units will be jointly selected or not selected. However, it is not possible to select some of them while the rest are not. This produces two problematic behaviors. First, it is possible to miss the minimal solution if it requires that some of the identical units be selected and not the rest. Second, it is possible not to find any feasible solutions. This happens whenever the selection of all identical units in a given hour produces an infeasible solution. Alternatively, if not selecting all the identical units in a given hour makes it impossible to supply the demand.

Rules to solve the problems with identical units may be constructed to make identical units sufficiently dissimilar. However, this can not necessarily always *preserve fairness*. One rule, for instance, is to penalize each company (unit) in a rotating fashion. However, such rules to preserve *fairness for every* unit are very difficult to construct.

10.4.2 Problem: Multiple optimal solutions

The data to demonstrate the next problem are shown in Tables 10.6 and 10.7, Case C. Unit 1 is *similar* to unit 4. They are peaking units. This demonstration includes start-up costs for units 1 and 4.

Two approaches were used. One used different starting λ and the other changed the order of the unit data as it is fed to the program (alternating between the two peak units, units 1 and 4). LR is run for two unit data input orders, unit order 1 2 3 4 and 4 2 3 1, and for each unit data input order, five starting λ are used. LR is run 100 iterations for each case. In 100 iterations LR may find the optimal solution more than once. The reason that LR is run for a fixed number of iterations instead of running until the duality gap is satisfied is to find out if different optimal solutions are found.

Table 10.6 Case C: Generating unit data

Unit	a_i	b_i	c_i	P_i^{min}	P_i^{max}	$stup_i$
1	0.002	10	500	100	600	3300.7
2	0.0025	8	300	100	400	0
3	0.005	6	100	50	200	0
4	0.002	9.88	542	100	600	3324.7

Table 10.7 Case C: Load data

Stage	1	2	3	4
Load	170	520	1100	1000

The result is easily explained. The unit data input order does not affect solution, i.e., unit order 1 2 3 4 and 4 2 3 1 give the exactly same solution. The optimal solutions found by LR in all different starting λ are the same. When LR found optimal solutions more than once, they are still the same as shown in Table 10.8.

Actually, there are two optimal solutions for this data. One is what LR found (shown in Table 10.8). The other is shown in Table 10.9. The optimal λ of the solution in Table 8 is used to test if LR will find the other optimal solution. This does not happen.

Table 10.8 Case C: Optimal solution

Stage(t)	Unit 1	Unit 2	Unit 3	Unit 4
1	0	0	170	0
2	0	320	200	0
3	0	400	200	500
4	0	400	200	400

Table 10.9 Case C: Alternate optimal solution

Stage(t)	Unit 1	Unit 2	Unit 3	Unit 4
1	0	0	170	0
2	0	320	200	0
3	500	400	200	0
4	400	400	200	0

Various starting λ and two different unit data input orders were used to obtain these results. Only one optimal solution is discovered. This optimal solution is the one in which LR selects unit 4 at the third and fourth stages whereas unit 1 could have been selected and would have provided the same total cost, $30,801.2. Thus, this is unfair to unit 1.

Many new installations are using similar generating units. Therefore using LR as an auction method may be inequitable to some generation companies. LR might not select these units, even though these units can provide the same total cost as the units originally selected.

Various starting λ and two different unit data input orders were used to obtain these results. Only one optimal solution is discovered. This optimal solution is the one in which LR selects unit 4 at the third and fourth

stages whereas unit 1 could have been selected and would have provided the same total cost, $30,801.2. Thus, this is unfair to unit 1.

Many new installations are using similar generating units. Therefore using LR as an auction method may be inequitable to some generation companies. LR might not select these units, even though these units can provide the same total cost as the units originally selected.

10.5 Parameter changes to achieve the desired dual solution

The formulation for power pool-type auctions is the same as that of UC. Based on [Dekrajangpetch, 1997], the dual decomposable problem is shown in Equations (10.3) to (10.5). The minimization in (10.5) is performed for each unit separately and is subject to individual constraints.

$$Max \quad dobj(\lambda^t) \tag{10.3}$$

where

$$dobj(\lambda^t) = \sum_{t=1}^{T} \lambda^t load^t + \sum_{i=1}^{N} d_i(\lambda^t) \tag{10.4}$$

$$d_i(\lambda^t) = \min_{u_i^t, P_i^t} \left(\sum_{t=1}^{T} [F_i(P_i^t) u_i^t + stup_i^t - \lambda^t P_i^t u_i^t] \right) \tag{10.5}$$

Suppose there is one single peak period (t) in total T periods. There are two similar peak units which are not selected in all other non-peak periods. These two units only have a chance to be selected for the peak period. Assume the dual solution , P_1^t is equal to P_1 if unit 1 is selected for the peak period ($u_1^t=1$). Assume the dual solution , P_2^t is equal to P_2 if unit 2 is selected for the peak period ($u_2^t=1$). Then the functions $d_1(\lambda^t)$ and $d_2(\lambda^t)$ can be shown as (10.6) and (10.7).

$$d_1(\lambda^t)=F_1(P_1)+stup_1^t-\lambda^t P_1 \tag{10.6}$$

$$d_2(\lambda^t)=F_2(P_2)+stup_2^t-\lambda^t P_2 \tag{10.7}$$

Assume that the optimal dual LaGrange multiplier at the peak period is λ^{t*}. If unit 1 is selected, it is because $d_1(\lambda^{t*})$ is less than zero which is corresponding to the value of optimal λ^{t*} in (10.8). Note that zero is the value of $d_1(\lambda^{t*})$ when unit 1 is not selected. On the contrary, if unit 1 is not selected, it is because $d_1(\lambda^{t*})$ is

greater than zero which is corresponding to the value of optimal λ^{t*} in (10.9). Equations for unit 2 are similar to (10.8) and (10.9). Only is subscript 1 changed to 2.

$$\lambda^{t*} > [F_1(P_1)+stup_1^t] / P_1 \tag{10.8}$$

$$\lambda^{t*} < [F_1(P_1)+stup_1^t] / P_1 \tag{10.9}$$

This study can be separated into four cases based on the unit selection: only unit 1 selected, only unit 2 selected, both units selected, and neither unit selected. The optimal dual LaGrange multipliers at the peak period, λ^{t*} for these four cases are described in (10.10), (10.11), (10.12), and (10.13), respectively.

$$[F_1(P_1)+stup_1^t] / P_1 < \lambda^{t*} < [F_2(P_2)+stup_2^t] / P_2 \tag{10.10}$$

$$[F_2(P_2)+stup_2^t] / P_2 < \lambda^{t*} < [F_1(P_1)+stup_1^t] / P_1 \tag{10.11}$$

$$\lambda^{t*} > max([F_1(P_1)+stup_1^t] / P_1, [F_2(P_2)+stup_2^t] / P_2) \tag{10.12}$$

$$\lambda^{t*} < min([F_1(P_1)+stup_1^t] / P_1, [F_2(P_2)+stup_2^t] / P_2) \tag{10.13}$$

From (10.10) and (10.11), we see that the unit with the lower ratio of the dual optimal total production cost and start-up cost to the dual optimal power is selected. Although both units can be selected at the same time according to the optimal λ^{t*} in (10.12), this is not desired for a GENCO because of two reasons. First, a GENCO does not know the value of the optimal λ^{t*} when the LR algorithm stops. The algorithm might stop at the optimal λ^{t*} which is not in the range of (10.12) and (10.13) because the objective function is good enough and the demand and other constraints are satisfied. If this occurs, there is a chance that a GENCO's unit will not be selected. Second, a GENCO would prefer that only its unit is selected rather than sharing the power sale with other units. Thus, a GENCO should develop strategies so that there will be a greater chance for its unit to be selected than other units.

In the above, the strategy is that a GENCO should submit a bid that has low total cost to power ratio. (From now on, this ratio will be referred as C/P ratio.) However, this will result in low revenue for a GENCO. Thus, a GENCO should modify the submitted bid to have low C/P ratio on the peak portion of the power but high C/P ratio on the low power portion. This technique of bid modification will allow a greater chance for a GENCO's unit to be selected. Also, this enables a GENCO to maximize revenue. Note that this technique will avoid the case that neither unit is selected, (10.13) automatically.

Although the derivation above is based on two similar peak units, it can be applied to any number of similar peak units and it is still true. The purpose of using two units is just for simplifying the explanation. The derivation can also be used with multi-peak periods.

Case C of section 10.4 is used to illustrate this concept. Units 1 and 4 are similar units. The C/P ratios of both units are shown in equations (10.14) and (10.15). Unit 4 has higher C/P ratios than unit 1 for almost the entire range of production except the range from 550 MW to 600 MW. The result for Case C is unit 4 is selected for periods 3 and 4. This is because the dual optimal power for units 1 and 4 lies in the range for which unit 4 has lower C/P ratio and the optimal λ^{t*} is between the optimal C/P ratios of units 4 and 1. For example, one set of the optimal LaGrange Multipliers at the third and fourth periods (λ^{3*} , λ^{4*}) is (16.7924, 12.7253) \$/MWh. Corresponding to the values of (λ^{3*} , λ^{4*}), the dual optimal values of power for both units 1 and 4 are 600 MW at the third period and 600 MW at the fourth period. The corresponding optimal C/P ratios of unit 1 at the third and fourth periods are the same and the value is 17.5345 \$/MWh. The corresponding optimal C/P ratios of unit 4 at the third and fourth periods are the same and the value is 17.5245 \$/MWh. It is evident that the optimal C/P ratio of unit 4 is lower than that of unit 1 and this is why unit 4 is selected instead of unit 1.

$$C/P\ (unit\ 1)=0.002*P^t_1+10.00+3800.7/P^t_1 \tag{10.14}$$

$$C/P\ (unit\ 4)=0.002*P^t_4+9.88+3866.7/P^t_4 \tag{10.15}$$

Note that actually the real dispatch power at the third and fourth periods of either unit 1 or 4 are 500 MW and 400 MW. At these levels of power, the C/P ratios of unit 1 are 18.6014 at the third period and 20.3018 at the fourth period. The C/P ratios of unit 4 are 18.6134 at the third period and 20.3468 at the fourth period. It can be seen that the C/P ratios of unit 4 are higher than the C/P ratios of unit 1 at the real dispatch power at both the third and fourth periods. However, the selection of unit is based on the dual problem and thus the comparison of C/P ratios is based on the dual solution (dual power) although the dual power is not the real generating power for units.

The strategy for submitting bids to have a greater chance to be accepted has been illustrated above. Next, the procedure of adjusting bid parameters will be described. The parameters considered in this work are divided into three groups: quadratic coefficient (a_i), linear coefficient (b_i), and constant cost and start-up cost (c_i+stup_i). Note that group three has two parameters. Thus, the resulting of change considers the total effect on the two parameters together.

If these three groups of parameters are lowered individually, this will lower the C/P ratio for the whole production range. This is not what a GENCO desires because of low revenue as previously explained. The numerical example to be shown demonstrates what happens when only linear cost is lowered. Two peak units are used for illustration. Unit 1 of Case C is used and thus unit 1 has C/P ratio as (10.14). Unit 4 has the same

parameters as unit 4 of Case C except that its constant cost (c_4) is changed to be 500 and its start-up cost ($stup_4$) is changed to be 3300.7. The C/P ratio of unit 4 is shown in (10.16) and is lower than the C/P ratio of unit 1 for the whole range of production.

$$C/P\ (unit\ 4)=0.002*P^t_4+9.88+3800.7/P^t_4 \tag{10.16}$$

If two of the three groups of parameters are changed simultaneously, there are three possible strategies as shown below.

Strategy 1: lower quadratic coefficient (a_i) and increase linear coefficient (b_i)

Strategy 2: lower quadratic coefficient (a_i) and increase constant cost and start-up cost (c_i+stup_i)

Strategy 3: lower linear coefficient (b_i) and increase constant cost and start-up cost (c_i+stup_i)

These three strategies are desired because they result in low C/P ratio on the peak portion of the power but high C/P ratio on the low power portion. The produced power for the unit having the reduced C/P ratio for each of the three strategies is shown in (10.17), (10.18), and (10.19), respectively. These formulas are useful for bid modification because they tell the range of peak power portion in which a unit's C/P ratio is lower than other units.

$$P = -(b_1-b_2)/(a_1-a_2) \tag{10.17}$$

$$P = sqrt\ (\ -[(c+stup)_1-(c+stup)_2]/(a_1-a_2)\ ) \tag{10.18}$$

$$P = -[(c+stup)_1-(c+stup)_2]/(b_1-b_2) \tag{10.19}$$

Units 1 and 4 of Case C provide a good illustration/example of Strategy 3. Unit 4 has a lower linear coefficient than unit 1, and unit 4 has higher constant cost and start-up cost than unit 1 ($b_4=9.88$, $b_1=10.00$, $(c+stup)_4=3866.7$, $(c+stup)_1=3800.7$). The power level at which the C/P ratio for unit 4 falls below that of unit 1 is $P= -(3800.7-3866.7)/(10.00-9.88)=550.00$ MW.

10.6 Sensitivity analysis

This section summarizes the results of sensitivity analysis in [Dekrajangpetch, 1999a]. The sensitivity analysis is performed by using the generating unit data and load data of Case A as Case D.

Case D consists of a sensitivity analysis for each of the cost parameters of units 4. The linear and constant parameters of the production function are varied. The start-up cost is also varied. The start-up cost data is $3000 for both units 1 and 4. The procedure varies each of these parameters of only unit 4 for -10% to 10% of the original value, in increments of 1%. Three starting λ are used for implementing the result of varying each parameter. The sensitivity analysis results are dependent on the subgradient updating procedure used.

The results show that the optimal solution can be found only if there is a difference in the parameters. If two or more units have similar values, then it is hard for the algorithm to select between the two. The algorithm can find the optimal solution with only 1% difference when either varying linear cost coefficient or start-up cost for all three starting λ. When varying constant cost, 4% difference is needed for the algorithm to find the optimal solution for one starting λ while 1% difference is needed for other two starting λ. The reason the algorithm needs 4% difference for one starting λ can be understood if the updating procedure is examined. The optimal value of λ cannot be reached by the updating algorithm from a value of one starting λ. The problem exists primarily at the peak demand level. At this level of operation, the optimal solution cannot be found. This problem is that the range of optimal λ of the peak period is small. Thus, if the vector λ is not updated properly based on the system data and the starting value, LR cannot converge to the optimal solution.

The other sensitivity analysis result is to find the number of iterations needed to find the optimal solution versus percent change of each parameter. The result is that varying the constant cost requires more iterations than varying either of the other costs and varying the start-up cost requires more iterations than varying the linear cost. In addition, the sensitivity analysis result above shows that the constant cost parameter requires 4% difference while only 1% difference is needed for the linear coefficient and start-up cost. Based on the same percent change of each parameter between units 4 and 1, the order from the most difficult to the least difficult for LR convergence is constant cost, start-up cost and linear cost, respectively. In other words, the resulting cost is least sensitive to the constant cost and most sensitive to the linear cost.

10.7 Parameter changes for real-time maximum generation

Section 10.5 suggests the strategies for adjusting parameters to enhance the chance of a unit being selected. The unit selection is performed in the dual problem. After the units are selected, the amount of power to be supplied by the units is decided in the primal problem by economic dispatch calculation. Thus, a GENCO should be concerned about this in adjusting its parameters.

The strategy for a GENCO to have higher real-time generation is to submit the bid with low incremental cost. The incremental cost of a unit is $2*a_i*P_i+b_i$. Thus, a GENCO should submit the bid with either a low quadratic coefficient (a_i) or a low linear coefficient (b_i) or both.

10.8 Summary of parameter changes

This section summarizes how to change unit parameters based on the strategy in sections 10.5 and 10.7 and the sensitivity analysis result in section 10.6. Three strategies for enhancing the chance of a unit being selected are presented in section 10.5. Not only does a GENCO desire a unit to be selected, a GENCO also wants its unit to produce as much power as it can. Thus, a GENCO should submit the bid with either a low quadratic coefficient (a_i) or a low linear coefficient (b_i) or both based on the strategy in section 10.7. Combining the strategies in sections 10.5 and 10.7, we see that Strategies 2 and 3 are dominant and should be used by a GENCO. Strategy 1 is not dominant because its increased linear coefficient (b_i) will in turn increase the unit's incremental cost.

When a GENCO adjusts parameters, a GENCO should always be concerned about the sensitivity of each parameters. If a sensitive parameter is adjusted, the unit's selection is more risky.

The strategies in this work are for peak periods due to the example presented. However, similar examples for other periods can also be generated. This is due to the LR convergence problems previously listed. For base-loaded units, strategies just involve tradeoffs between lowering bids and increasing profits.

10.9 Bidding Strategies

The information provided is a critical piece of information for the generation of biding strategies. Additional information required would include a complete model of the competition's bidding strategy based on historical market actions, the auction market rules, and the expected impact of correlated markets on the electric market being used. The development and evaluation of complete bidding strategies requires not only simulation of the market [Chapter 6, [Ilic, 1998]] but also dynamic restructuring of the bidding strategy as each correlated market and bidder changes [Richter, 1997, Richter, 1999]. An Energy Service Company (ESCO) or a GENCO would also have to review the capability of direct load control and other customer contract flexibility to determine the complete range of input data needed to determine a bidding strategy [Ng, 1997,Ng, 1998a,Ng, 1998b].

10.10. Conclusions

Problems in implementing an auction with LR when identical or similar units exist in the system have been known. This work develops supporting information for bidding strategy development that will enhance the acceptance of GENCO bids. The bidding information illustrated in this work is based on the total cost to power ratio, which is actually the average production cost. For nearly identical units, a GENCO can always force unit selection to be dispatched for a price advantage. Additionally, a GENCO can always force more generation dispatch after unit selection. This makes LR a biased auction method that would favor the gaming GENCO. For similar units, the optimal solution may be directed by a sophisticated GENCO. Any subset of similar units

can be used to force alternative optimal solutions. This is inequitable to the units not in the chosen subset that actually can provide an alternative optimal solution.

Because the dispatcher has to use heuristic selection, there is no obviously "fair" solution to these problems. The auction procedure should be separated. This can be considered a decentralized unit commitment as suggested by [Sheblé, 1996b, Sheblé, 1994a, Kumar, 1996b, Kumar, 1996a, Sheblé, 1994b, Sheblé, 1994c, Kumar, 1997] and as implemented in Spain [Debs, 1998, Otero, 1998]. Instead of submitting cost models to the ICA, GENCOs submit period (hourly) bids, which are composed of prices and quantities to the ICA. ESCOs also submit similar bids to the ICA. Then, the ICA can use other auction methods that are not based on heuristic rules [Sheblé, 1996b, Sheblé, 1994a, Kumar, 1996b, Kumar, 1996a, Sheblé, 1994b, Sheblé, 1994c, Kumar, 1997]. Interior point linear programming is an example of a method that is not based on heuristic rules [Dekrajangpetch, 1997].

11 CONCLUSIONS

As the electric power industry is restructuring in many places, there are still many problems that need to be solved. These problems have been realized through the restructuring experience in places where deregulation has already occurred and through research. The work in this dissertation contributes by solving some of the restructuring problems that are grounded in the use of auctions.

Auctions are considered a promising mechanism for trading electricity in the new price-based market. Two major forms of auctions are CDCA and SPCA. In the past where the operation was cost-based, electricity trading appeared in two major forms, power pools and energy brokerage systems. Power pools can be considered basic CDCAs and energy brokerage systems can be considered basic SPCAs. The concepts of CDCA and SPCA are illustrated in chapter 2.

There is a temptation to implement CDCA in the new marketplace because CDCA is similar to the UC process, to which people in electric power area are accustomed and present UC software should be modifiable easily for use with CDCA. However, implementation problems occur with CDCA when identical or similar units exist in the system. These units can prevent LR from finding an optimal solution or even a feasible solution. In addition, the optimal solution may require selection of only a subset of the similar units and any subset of the similar units can produce an optimal solution. These problems will result in contested auctions. Problems of implementing CDCA were illustrated in [Dekrajangpetch, 1997, Dekrajangpetch, 1999a].

Chapter 10 shows how these problems of implementing CDCA may be intensified by illustrating how GENCOs can manipulate their unit data to enhance the acceptance of their bids by taking an advantage of the auction implementation problems using LR. To enhance the bid acceptance in such an auction scenario, unit parameters can be manipulated to enhance the chance of a unit to be selected and also enhance the amount of real-time generation. To demonstrate the technique, two bidding strategies are developed. One strategy is to lower quadratic coefficients and increase constant cost and start-up cost. The other strategy is to lower linear coefficient and increase constant cost and start-up cost.

Because of the problems of implementing CDCA as described above, SPCA should be used to implement auctions. It can be said that the problems of CDCA are rooted in the nonlinear nature of the CDCA structure. Due to its nonlinearity, methods for solving nonlinear programming like LR need to be applied to obtain the auction results and this leads to the described problems. SPCA is built on a linear auction structure and non-heuristic methods like LP can be used to solve for auction results. Because of its advantages, the rest of this work reported here is based on SPCA.

Unlike other commodities, electricity has a special property; that is, flow of electricity has to follow Kirchoff's laws. This special property causes difficulty in calculation because power flow constraints, which specify bus injections and bus voltages, need to be incorporated in auction formulations. The number of power flow constraints is large for practical power systems. In addition, this special property causes transmission flows

to be impacted by all transactions and difficulty in distinguishing the fraction of the flow in a line resulting from a particular transaction. This causes tremendous difficulty for electricity pricing.

Nodal pricing has been proposed for use with electricity pricing and there has been much debate about its problems. In chapter 3, characteristics of good pricing methods were described. Nodal pricing does not exhibit most of the good pricing characteristics. Two major problems of nodal pricing are that some of its components are based on non-actual cost, and that nodal pricing does not encourage TRANSCOs to expand the power system network. A better pricing method is developed, which is based on an accounting process along all the iterations of the simplex method being used to solve for auction solutions. Changes between adjacent iterations are tracked and at the end the changes are summed to be the total. The developed pricing method has good pricing characteristics.

Auctions can be thought as the assignment of electricity from sellers to buyers and thus are comparable to the assignment of other products that were already available in the society. The optimum assignment of other products from sellers to buyers has been solved from the formulation in the category of transportation problems. The formulation needs to be modified for use with electric power auctions when different auction structures are needed.

Chapter 4 provides comprehensive formulations for many more cases than previously available in the literature. Cases are clearly separated into categories based on four criteria. First, electric power contracts are treated either as heterogeneous products or homogeneous products. Second, players may or may not be specified. Third, electric power prices are specified either by sellers or buyers in a single-sided auction, or by both in a double-sided auction. Fourth, reservation prices may or may not be included in trading. Because the cases are separated clearly, the formulations provided can be easily modified for use with other auction formulations when needed.

The presence of multiple optima in the auction solution is also discussed in chapter 4. Multiple optima are undesirable in auctions because it will result in arguable auction results. Multiple dual optima can be detected easily in all the formulations illustrated by checking whether the total supply capacity is equal to the total potential demand. Note that multiple primal optima can be easily detected by checking whether the RCC of some of the nonbasic variables at the optimal solutions are zeros. If the IPLP is used, the multiple primal optima can be detected during the calculation; more detail is provided in chapter 7.

In the past when the electric power market was regulated, there were options of availability levels in which some customers can choose to buy electricity. For the price-based market, this option should still be available to the customers via auctions. Chapter 5 describes an auction framework that allows several classes of power contracts separated by availability and EES levels. The benefit of this type of auctions is that traders have additional price signals, which are the availability and EES levels. This type of auctions will introduce more complexity to the market. It could be argued that even the single availability level auctions currently in use do not work completely yet—people are still learning about them. Thus, the implementation of multiple-class auctions should begin with the simplest structure and gradually develop a more complicated structure.

Because of the complexity, chapter 6 outlines the simpler auctions in which ancillary services are incorporated into trading. Buyers can have their desired availability and EES levels by purchasing enough ancillary services via auctions. Auctioning in this way, traders do not have the auction classes to choose and the ICA imposed a fixed amount of required ancillary services into the constraints.

As mentioned earlier that the number of power flow constraints is large for practical power systems, this can slow the calculation of auction results. IPLP is famous for its speed in reaching the optimal solution but has some drawbacks; the optimal basis is not generally available and thus sensitivity analysis can not be performed. Chapter 7 illustrates the enhanced algorithm built on an affine-scaling primal algorithm in which the optimal basis can be recovered and then sensitivity analysis can be performed. The enhanced algorithm is applied to sensitivity analysis on submitted bid prices. Sensitivity analysis is also performed on line limits, which is beneficial since it allows the ICA to study which lines are worth expanding.

Chapter 9 illustrates a systematic method to apply a decision approach to auction results to determine the optimal expansion plan. There are a great number of auction results and there must be a systematic way for aggregating these results. The method provided in this chapter uses the concept of a decision tree to aggregate the auction results systematically. The results from the study are an important piece of input to be used by ICA if the ICA is to make decisions for an expansion plan.

One of the most important issues for deregulation is market power. The ICA needs to inspect the market to see whether market power exists. Indices are a quick tool for the ICA to assess the market power. Modified Lerner index is superior because it is calculated based on prices, which is an important mean of conveying information in the price-based market. If the ICA needs detailed information for determining market power, the simulation approach available in the literature could be incorporated.

Most of the work in this dissertation is presented from the viewpoint of the regulator and the ICA to achieve an ideal (good) market. In chapter 10, market reach is presented from the viewpoint of GENCOs. Several methods are presented for the firms to enhance their market reach. Firms who have generating units in several locations can use this locational advantage to enhance their market reach. Although market reach is presented from the viewpoint of GENCOs, the concepts presented can allow the ICA to determine which players in the market often have high market reach, which could indicate market power.

BIBLIOGRAPHY

[Alvarado, 1998] F. L. Alvarado, "Market power: a dynamic definition," International Symposium on Bulk Power Systems Dynamics and Control—IV, Restructuring, Santorini, Greece, 1998, proceedings in press.

[Alvey, 1997] T. Alvey, D. Goodwin, X. Ma, D. Streiffert, and D. Sun, "A security-constrained bid-clearing system for the New Zealand wholesale electricity market," presented at the 1997 IEEE PES Summer Power Meeting, Berlin, Germany, in press.

[Anderson, 1992] J. A. Anderson, "Why opportunity costs are not legitimate," *Public Utilities Fortnightly*, vol. 129, no. 3, pp.21-24.

[Anderson, 1996] E. Anderson, and Y. Ye, "Combining interior-point and pivoting algorithms for linear programming," *Management Science*, vol. 42, no. 12, December 1996, pp. 1719-1731.

[Arbel, 1993] A. Arbel, *Exploring Interior-Point Linear Programming*, The MIT Press, London, 1993.

[Baughman, 1991] M. L. Baughman and S. N. Siddiqi, "Real-time pricing of reactive power: theory and case study results," *IEEE Trans. on Power Systems*, vol. 6, no. 1, February 1991, pp. 23-29.

[Bazaraa, 1990] M. Bazaraa, J. Jarvis, and H. Sherali, *Linear Programming and Network Flows*. John Wiley and Sons, New York, 2nd Edition, 1990.

[Beshir, 1996] M. J. Beshir, T. C. Cheng, and A.S. A. Farag, "Comparison of two bulk power adequacy assessment programs: TRELSS and COMREL," *Proceedings of the 14th IEEE Transmission and Distribution Conference*, Los Angeles, California, September 1996, pp. 431-437.

[Bhavaraju, 1992] M. P. Bhavaraju, N. E. Nour, N. J. Balu, and M.G. Lauby, "TRELSS: a computer program for transmission reliability evaluation of large scale systems," *Proceedings of the 54th Annual Meeting of the American Power Conference*, vol. 54, part 2, Chicago, Illinois, 1992, pp. 1572-1579.

[Bialek, 1996] J. Bialek, "Tracing the flow of electricity," *IEE Proceedings Generation, Transmission and Distribution*, vol. 143, no. 4, July 1996, pp. 313-320.

[Bialek, 1997] J. W. Bialek, "Elimination of merchandise surplus due to spot pricing of electricity," *IEE Proceedings Generation, Transmission and Distribution*, vol. 144, no. 5, September 1997, pp. 399-405.

[Binger, 1988] B. R. Binger and E. Hoffman, *Microeconomics with Calculus*, Scott, Foresman and Company, Glenview, Illinois, 1988.

[Bixby, 1994] R. Bixby, and M. Saltzman, "Recovering an optimal LP basis from an interior-point solution," *Operations Research Letters*, vol. 15, no. 4, May 1994, pp. 169-178.

[Calviou, 1993] M. C. Calviou, R. M. Dunnett, and P. H. Plumptre, "Charging for use of a transmission system by marginal cost methods," *Proceedings of the Power System Computation Conference*, Avignon, 1993, pp. 385-391.

[Chao, 1988] H. Chao, S. S. Oren, S. A. Smith, and R. B. Wilson, "Priority service: market structure and competition," *The Energy Journal*, vol. 9, Special Issue on Electricity Reliability, 1988, pp. 77-103.

[Conejo, 1998] A. Conejo, and J. Arroyo, "Lagrangian Relaxation Case Studies," *University Report*, January 1998.

[Cornes, 1996] R. Cornes and T. Sandler, *The Theory of Externalities, Public Goods and Club Goods*, 2nd Edition, Cambridge University Press: New York, 1996.

[Dansby, 1979] R. E. Dansby and R. D. Willig, "Industry performance gradient indexes," *The American Economic Review*, vol. 69, no. 3, pp. 249-260, June 1979.

[Debs, 1998] A. Debs, "Overview of Electric Utility Restructuring and Energy," Energy Trading and Risk Management for the Electric Power Sector, Madrid, Spain, 1998.

[Dekrajangpetch, 1997] S. Dekrajangpetch, *Auction Implementations Using LaGrangian Relaxation, Interior-Point Linear Programming, and Upper-Bound Linear Programming*, Master's Thesis, Iowa State University, Ames, IA, 1997.

[Dekrajangpetch, 1998] S. Dekrajangpetch and G. B. Sheblé, "Alternative implementations of electric power auctions," in *Proceedings of the 60th American Power Conference*, vol. 60-1, pp. 394-398, 1998.

[Dekrajangpetch, 1999a] S. Dekrajangpetch, and G. Sheblé, "Auction implementation problems using LaGrangian relaxation," *IEEE Trans.* on *Power Systems*, vol.14, no. 1, pp. 82-88, February 1999.

[Dekrajangpetch, 1999b] S. Dekrajangpetch, and G. Sheblé, "Interior-point linear programming algorithm for auction methods," *IEEE Trans.* on *Power Systems*, PE-068-PRS, 1999.

[Dekrajangpetch, 1999c] Somgiat Dekrajangpetch and Gerald B. Sheblé, "Bidding information to generate bidding strategies for LaGrangian relaxation-based power auction," *Electric Power Systems Research Journal*, vol. 52, pp. 87-96, 1999.

[Dekrajangpetch, 1999d] Somgiat Dekrajangpetch and Gerald B. Sheblé, "Structure and formulations for electric power auctions," accepted for publication in the *Electric Power Systems Research Journal.*

[Department of Justice, 1997] Department of Justice and the Federal Trade Commission, *Horizontal Merger Guidelines*, April 8, 1997.

[Einhorn, 1994] M. A. Einhorn, *From Regulation to Competition: New Frontiers in Electricity Markets*, Kluwer Academic Publishers, Boston, 1994.

[Fahd, 1992a] G. Fahd, D. Richards, and G. B. Sheblé, "The implementation of an energy brokerage system using linear programming," *IEEE Transactions on Power Systems*, T-PWRS, vol. 7, no. 1, pp. 90-96, February 1992.

[Fahd, 1992b] G. Fahd and G. B. Sheblé, "Optimal Power Flow of Interchange Brokerage System Using Linear Programming," *IEEE Transaction on Power Systems*, T-PWRS, vol. 7, no. 2, pp. 497-504, May 1992.

[Finney, 1997] J. D. Finney, H. A. Othman, and W. L. Rutz, "Evaluation transmission congestion constraints in system planning," *IEEE Trans. on Power Systems*, vol. 12, no. 3, August 1997, pp. 1143-1150.

[Fisher, 1981] M. L. Fisher, "The LaGrangian Relaxation Method for Solving Integer Programming Problems," *Management Science*, vol. 27, no. 1, January 1981, pp. 1-18.

[Gedra, 1998] T. Gedra, *Power Economics and Regulation*, Gedra Publishing, Stillwater, 1998.

[Granville, 1994] S. Granville, "Optimal reactive dispatch through interior point methods," *IEEE Trans. on Power Systems*, vol. 9, no. 1, February 1994, pp. 134-146.

[Hao, 1997] S. Hao, G. Angelidis, H. Singh, and A. Papalexopoulos, "Consumer Payment Minimization in Power Pool Auctions," *Proceedings of the 20th International Conference on Power Industry Computer Applications*, Columbus, Ohio, May 1997, pp. 368-373.

[Happ, 1994] H. H. Happ, "Cost of wheeling methodologies," *IEEE Trans. on Power Systems*, vol. 9, no. 1, February 1994, pp. 147-156.

[Hillier, 1995] F. Hillier and G. Lieberman, *Introduction to Operations Research*, McGraw-Hill, New York, 6th edition, 1995.

[Hirst, 1998] E. Hirst and B. Kirby, "Simulating the operation of markets for bulk-power ancillary services," *The Energy Journal*, vol. 19, no. 3, 1998, pp. 49-68.

[Hobbs, 1985] B. F. Hobbs and R. E. Schuler, "An assessment of the deregulation of electric power generation using network models of imperfect spatial markets," *Papers of the Regional Science Association*, vol. 57, pp. 75-89, 1985.

[Hogan, 1992] W. Hogan, "Contract networks for electricity power transmission," *Journal of Regulatory Economics*, vol. 4, 1992, pp. 211-242.

[Hogan, 1993] W. W. Hogan, "Markets in real electric networks require reactive prices," *The Energy Journal*, vol. 14, no. 3, pp. 171-200.

[Hogan, 1997] W. W. Hogan, "A market power model with strategic interaction in electricity networks," *The Energy Journal*, vol. 18, no. 4, pp. 107-141, 1997.

[Horton, 1984] J. S. Horton and L. L. Grigsby, "Voltage optimization using combined linear programming and gradient techniques," *IEEE Transaction on Power Apparatus and Systems*, vol. PAS-103, no. 7, July 1984, pp. 1637-1643.

[Ilic, 1998] M. Ilic, F. Galiana, L. Fink, *Power Systems Restructuring: Engineering and Economics*, Kluwer Academic Publishers, Boston, 1998.

[Jacobs, 1997] J. Jacobs, "Artificial Power Markets and Unintended Consequences," *IEEE Trans.* on *Power Systems*, vol. 12, no. 2, May 1997, pp. 968-972.

[Johnson, 1997] R. Johnson, S. Oren, and A. Svoboda, "Equity and Efficiency of Unit Commitment in Competitive Electricity Markets," *Utilities Policy: Strategy, Performance, Regulation*, vol. 6, no. 1. 1997, pp. 9-19.

[Kaye, 1995] R. J. Kaye, F. F. Wu, and P. Varaiya, "Pricing for system security," *IEEE Trans. on Power Systems*, vol. 10, no. 2, May 1995, pp. 575-583.

[Kojima, 1986] M. Kojima, "Determining basic variables of optimal solutions in Karmarkar's new LP algorithm," *Algorithmica*, vol. 1, no. 4, 1986, pp. 499-515.

[Kumar, 1996a] J. Kumar, and G. B. Sheblé, "Framework for energy brokerage system with reserve margins and transmission losses," *IEEE Trans.* on *Power Systems*, vol. 11, no. 4, November 1996, pp. 1763-1769.

[Kumar, 1996b] J. Kumar, and G. Sheblé, "Auction game in electric market place," *Proceedings of the 1996 58th American Power Conference*, vol. 58, part 2, 1996, pp. 1272-1277.

[Kumar, 1997] J. Kumar, and G. B. Sheblé, "Auction market simulator for price based operation." Paper resented at the 1997 IEEE PES Summer Power Meeting, Berlin, Germany, in press.

[Lerner, 1934] A. P. Lerner, "Monopoly and the measurement of monopoly power," *Review of Economic Studies*, vol. 1, pp. 157-175, June 1934.

[Marshall, 1989] J. F. Marshall, *Futures and Option Contracting: Theory and Practice*, South-Western Publishing, Cincinnati, 1989.

[Marsten, 1989] R. Marsten, M. Saltzman, D. Shanno, G. Pierce, and J. Ballintijn, "Implementation of a dual affine interior point algorithm for linear programming," *ORSA Journal on Computing*, vol. 1, no. 4, 1989, pp. 287-297.

[McAfee, 1987] R. McAfee and J. McMillan, "Auctions and biddings," *Journal of Economic Literature*, vol. 25, pp. 699-738, June 1987.

[McCalley, 1999a] J. D. McCalley, "Innovations and strategies for power system reliability," Lecture Notes from: *Power System Operators Short Course*, A five-day Short Course Presentation, April 19-23, 1999, in Ames, IA.

[McCalley, 1999b] J. D. McCalley, V. Vittal, and N. Abi-Samra, "An overview of risk-based security assessment," *Proceedings of the 1999 IEEE/PES Summer Meeting*, Canada, July 1999, pp. ?.

[Megiddo, 1991] N. Megiddo, "On finding primal- and dual-optimal bases," *ORSA Journal on Computing*, vol. 3, no. 1, 1991, pp. 63-65.

[Meliopoulos, 1988] A. P. Sakis Meliopoulos, G. Contaxis, R. R. Kovacs, N. D. Reppen, and N. Balu, "Power system remedial action methodology," *IEEE Trans. on Power Systems*, vol. 3, no. 2, May 1988, pp. 500-509.

[Merlin, 1983] A. Merlin, and P. Sandrin, "A New Method for Unit Commitment at Electricite De France," *IEEE Trans. on PAS*, vol. PAS-102, no. 5, May 1983, pp. 1218-1225.

[Michaels, 1995] R. J. Michaels and A. S. De Vany, "Market-based rates for interstate gas pipelines: the relevant market and the real market," *Energy Law Journal*, vol. 16, no. 2, 1995, pp. 299-346.

[Momoh, 1994] J. Momoh, S. Guo, E. Ogbuobiri, and R. Adapa, "Quadratic interior point method solving power system optimization problems," *IEEE Trans. on Power Systems*, vol. 9, no. 3, August 1994, pp. 1327-1336.

[Momoh, 1995] J. Momoh, L. Dias, S. Guo, and R. Adapa, "Economic operation and planning of multi-area interconnected power systems," *IEEE Trans. on Power Systems*, vol. 10, no. 2, May 1995, pp. 1044-1053.

[Momoh, 1997] J. Momoh, Y. Wang, M. Elfayoumy, and B. Mittelstadt, "Reliability value-based power system operation decision," *Proceedings of the 1997 IEEE International Conference on Systems, Man, and Cybernetics*, vol. 4, part 4, Orlando, Florida, October 1995, pp. 3458-3465.

[Ng, 1997] K. Ng, and Gerald Sheblé, "Direct Load Control: A Profit Based Load Management using Linear Programming," accepted for presentation at the 1997 Summer Meeting, and for publication in *IEEE Trans. on Power Systems*, in press.

[Ng, 1998a] K. Ng, and G. B. Sheblé, "Demand Side Management Control for Price Based Operation," submitted for presentation and for publication at the 1998 IEEE Summer Power Meeting, pp. 1-7. (7)

[Ng, 1998b] K. Ng, and G. B. Sheblé, "Battery Stored Energy Control for Price Based Operation," submitted for presentation and for publication at the 1998 IEEE Summer Power Meeting, pp. 1-7. (7)

[Oren, 1995] S. S. Oren, P. T. Spiller, P. Varaiya, and F. Wu, "Nodal prices and transmission rights: a critical appraisal," *The Electricity Journal*, April 1995, pp. 24-35.

[Oren, 1997] S. S. Oren, "Economic inefficiency of passive transmission rights in congested electricity systems with competitive generation," *The Energy Journal*, vol. 18, no. 1, pp. 63-83, 1997.

[Otero, 1998] I. Otero-Novas, and C. Meseguer, "Wholesale Market Model as a Fundamental Analysis Tool," Energy Trading and Risk Management for the Electric Power Sector, Madrid, Spain, 1998.

[Perl, 1996] L. J. Perl, "Measuring market power in electrical generation," *Antitrust Law Journal*, vol. 64, pp. 311-321, 1996.

[Ponnambalam, 1992] K. Ponnambalam, V. Quintana, and A. Vannelli, "A fast algorithm for power system optimization problems using an interior point method," *IEEE Trans. on Power Systems*, vol. 7, no. 2, May 1992, pp. 892-899.

[Post, 1994] D. Post, *Electric Power Interchange Transaction Analysis And Selection*, Master's thesis, Iowa State University, 1994.

[Post, 1995] D. Post, S. Coppinger, and G. Sheblé, "Application of auctions as a pricing mechanism for the interchange of electric power," *IEEE Trans.* on *Power Systems*, vol. 10, no. 3, August 1995, pp. 1580-1584.

[Power Technologies, 1999] Power Technologies, inc., *Supporting Information for TPLAN*, Web-site of Power Technologies, inc.

[Richter, 1997] C. Richter, and G. B. Sheblé, "Genetic Algorithm Evolution of Utility Bidding Strategies for the Competitive Marketplace," presented at the 1997 IEEE PES Summer Power Meeting, Berlin, Germany, in press.

[Richter, 1999] C. Richter, and G. Sheblé, "Comprehensive Bidding Strategies with Genetic Programming/Finite State Automata," accepted for publication in the *IEEE Trans. on Power Systems*, in press.

[Rudnick, 1995] H. Rudnick, R. Palma, and J. E. Fernández, "Marginal pricing and supplemental cost allocation in transmission open access," *IEEE Trans. on Power Systems*, vol. 10, no. 2, May 1995, pp. 1125-1142.

[Schweppe, 1988] F. C. Schweppe, M. C. Caramanis, R. D. Tabors, and R. E. Bohn, *Spot Pricing of Electricity*, Kluwer Academic Publishers, Boston, 1988.

[Sheblé, 1992] G. B. Sheblé, and G. N. Fahd, "LaGrangian Relaxation," *Class Notes*, June 1992.

[Sheblé, 1994a] G. B. Sheblé, "Electric Energy in a Fully Evolved Marketplace." Presented at the 1994 North American Power Symposium, Kansas State University, KS, 1994.

[Sheblé, 1994b] G. B. Sheblé, and J. D. McCalley, "Discrete auction systems for power system management." Presented at the 1994 National Science Foundation Workshop, Pullman, WA, 1994.

[Sheblé, 1994c] G. B. Sheblé, "Simulation of discrete auction systems for power system risk management," *Proceedings of the 27th Annual Frontiers of Power Conference*, Oklahoma, October 1994, pp. I-1 to I-9.

[Sheblé, 1996a] G. B. Sheblé, M. Ilic, B. F. Wollenberg, and F. Wu, Lecture Notes from: *Engineering Strategies for Open Access Transmission Systems*, A two-day Short Course Presentation, December 5 and 6, 1996, in San Francisco, CA.

[Sheblé, 1996b] G. Sheblé, "Priced based operation in an auction market structure," *IEEE Trans.* on *Power Systems*, vol. 11, no. 4, November 1996, pp. 1770-1777.

[Shy, 1996] O. Shy, *Industrial Organization: Theory and Application*, The MIT Press, London, England, 1996.

[Silberberg, 1990] E. Silberberg, *The Structure of Economics: A Mathematical Analysis*, McGraw-Hill, Singapore, 2nd Edition, 1990.

[Singh, 1997] H. Singh, S. Hao, and A. Papalexopoulos, "Power auctions and network constraints," *Proceedings of the 30th Annual Hawaii International Conference on System Sciences*, Part 5, Wailea, Hawaii, January 1997, pp.608-614.

[Strbac, 1996] G. Strbac, S. R. M. Ahmed, D. Kirschen, "Load management services in post-contingency control," *Proceedings of the International Conference on Power System Control and Management*, London, UK, no. 421, April 1996, pp. 76-81.

[Sullivan, 1977] R. L. Sullivan, *Power System Planning*, McGraw-Hill, New York, 1977.

[Thompson, 1992] G. L. Thompson, and S. Thore, *Computational Economics: Economic Modeling with Optimization Software*, Boyd and Fraser Publishing Company, Denver, 1992.

[Torres, 1996] G. Torres, V. Quintana, and G. Lambert-Torres, "Optimal power flow in rectangular form via an interior point method," *Proceedings of the 28th North American Power Symposium*, November 1996, pp. 481-488.

[Virmani, 1989] S. Virmani, E. C. Adrian, K. Imhof, and S. Mukherjee, "Implementation of a LaGrangian Relaxation Based Unit Commitment Problem," *IEEE Trans.* on Power *Systems*, vol. 4, no. 4, October 1989, pp. 1373-1380.

[Wang, 1994] X. Wang and J. R. McDonald, *Modern Power System Planning*, McGraw-Hill, London, 1994.

[Wei, 1996] H. Wei, H.Sasaki, and R. Yokoyama, " An application of interior point quadratic programming algorithm to power system optimization problems," *IEEE Trans. on Power Systems*, vol. 11, February 1996, pp. 260-266.

[Werden, 1996] G. J. Werden, "Identifying market power in electric generation," *Public Utilities Fortnightly*, vol. 134, no. 4, pp. 16-21, February 15, 1996.

[Wood, 1996] A. J. Wood, and B. F. Wollenberg, *Power Generation, Operation, and Control*, John Wiley and Sons, 2nd Edition, New York, 1996.

[Wu, 1993] Y. Wu, A. Debs, and R. Marsten, "A direct nonlinear predictor-corrector primal-dual interior point algorithm for optimal power flows," *Proceedings of the 1993 IEEE Power Industry Computer Applications Conference*, May 1993, pp. 138-145.

[Yan, 1996] X. Yan, and V. Quintana, "An efficient predictor-corrector interior point algorithm for security-constrained economic dispatch," *Proceedings of the 1996 IEEE/PES Summer Meeting*, Paper 96 SM 506-6 PWRS, pp. 1-8.

[Ye, 1992] Y. Ye, "On the finite convergence of interior-point algorithms for linear programming," *Mathematical Programming*, vol. 57, no. 2, 1992, pp. 325-335.

[Zhuang, 1988] F. Zhuang, and F. D. Galiana, "Towards a more rigorous and practical unit commitment by LaGrangian relaxation," *IEEE Trans. on Power Systems*, vol. 3, no. 2, May 1988, pp. 763-773.